OPERATING INSTRUCTIONS

Leeb 5 / 6 / 8.280 VL
Leeb 5 / 6 / 8.300 VL
Leeb 5 / 6.280 VN
Leeb 5 / 6.300 VN

TRANSLATION OF THE ORIGINAL OPERATING INSTRUCTIONS
READ CAREFULLY PRIOR TO STARTING UP!
KEEP OPERATING INSTRUCTIONS IN A SAFE PLACE!

ART.: 60043155
ISSUE: 04/2021

HORSCH
Farming with passion

- Translation of the Original Operating Instructions -

Machine Identification

The corresponding data is to be entered into the list below upon receiving the machine:

Serial number: .....
Machine type: .....
Year of construction: .....
Initial installation: .....
Fittings: .....
.....
.....
.....

Publication date of Operation Manual: 04/2021 60043155 Leeb VL/VN en
Latest change:

Address of Retailer:

Name: .....
Road: .....
Town/City: .....
Tel.: .....

Customer No.:
Retailer: .....

Address of HORSCH:

HORSCH Maschinen GmbH
92421 Schwandorf, Sitzenhof 1
92401 Schwandorf, Postbox 1038

Tel.: +49 (0) 9431 / 7143-0
Fax: +49 (0) 9431 / 7143-9200
E-mail: info@horsch.com

Customer No.:
HORSCH: .....

Confirmation of receipt of machinery

Warranty claims become only effective when the first use of the machine is reported to HORSCH Maschinen GmbH within a week.

At *www.horsch.com* under *SERVICE PARTNERBEREICH* an interactive PDF form is available for download for this purpose (not available in all languages).
By clicking on *Send* – depending on the email program installed – a mail draft with the completed form is generated automatically. Alternatively, the form can be sent as email attachment to *machine.registration@horsch.com*.

A different form of registration (postal mail, by fax, etc.) is not allowed for.

CE

HORSCH

EG-Konformitätserklärung

Die

HORSCH LEEB Application Systems GmbH

Kleegartenstraße 54, D-94405 Landau a. d. Isar

erklärt hiermit in alleiniger Verantwortung als Hersteller, dass das nachfolgend genannte Produkt:

Typ: ***Selbstfahrende Pflanzenschutzspritze***

Leeb 5.280 VL	***Leeb 5.300 VL***	***Leeb 5.280 VN***
Leeb 6.280 VL	***Leeb 6.300 VL***	***Leeb 6.280 VN***
Leeb 8.280 VL	***Leeb 8.300 VL***	***Leeb 5.300 VN***
		Leeb 6.300 VN

den einschlägigen grundlegenden Sicherheits- und Gesundheitsanforderungen der Richtlinien 2006/42/EG und 2009/127/EG entspricht.

Landau, 22.02.2021

Theodor Leeb
Geschäftsführer

Klaus Winkler
Dokumentationsbevollmächtigter
HORSCH Maschinen GmbH
Sitzenhof 1
D-92421 Schwandorf

Translation of EC Declaration of Conformity

(Directive 2006/42/EC)

The manufacturer

HORSCH LEEB Application Systems GmbH
Kleegartenstraße 21
D-94405 Landau a. d. Isar

hereby declares that the product

Self-propelled crop protection sprayer

Type:

Leeb 5.280 VL	***Leeb 5.300 VL***	***Leeb 5.280 VN***
Leeb 6.280 VL	***Leeb 6.300 VL***	***Leeb 6.280 VN***
Leeb 8.280 VL	***Leeb 8.300 VL***	***Leeb 5.300 VN***
		Leeb 6.300 VN

this declaration refers to, conforms with all relevant fundamental health and safety requirements of the directive 2006/42/EC and 2009/127/EC.

Landau, 22/02/2021

Theodor Leeb
Managing director

Klaus Winkler
Documentation Representative
HORSCH Maschinen GmbH
Sitzenhof 1
D-92421 Schwandorf

Table of contents

Introduction

Foreword

We would like to thank you for the trust you have expressed in us by buying this machine. Congratulations for having purchased a quality product from HORSCH.

Before commissioning the machine, read and strictly comply with the operating instructions. In doing so, you will avoid accidents, reduce repair costs and downtime and increase the reliability and service life of your machine. Pay attention to the safety notes!

HORSCH will not assume liability for any damage or malfunctions resulting from failure of complying with the operating instructions.

These operating instructions will assist you in getting to know your machine and using it correctly for its intended purposes.

The operating instructions must be read and strictly adhered to by all persons working on or with the machine e.g.:

- Operation (including preparation, fault rectification during work, care)
- Maintenance (maintenance, inspection)
- Transport

Optionally, trained personnel of our service and sales partners will instruct you in the operation and care of your machine. By submitting the acknowledgement of receipt you have confirmed proper acceptance of the machine.
The warranty period starts with the date of delivery.

The operating instructions were prepared based on the EC Machinery Directive, EN Standards and German laws and regulations. The national laws and regulations must be observed when using the machine. National laws and regulations supersede the information of the operating instructions!

We reserve the right to alter illustrations as well as technical data and weights contained in these operating instructions for the purpose of improving the machine.

The illustrations in these operating instructions show different versions of the machine and different equipment variants.
Because of technical progress, the instructions may contain illustrations that do no longer correspond to the current series status.

Notes on representation

Warning notes

These operating instructions distinguish between three different types of warning notes.

The following **signal words with warning symbols** are used:

⚠ DANGER

Highlights a danger that **will lead** to death or severe injury if it is not avoided.

⚠ WARNING

Highlights a danger **that may lead** to death or severe injury if not avoided.

⚠ CAUTION

Highlights a danger that can lead to injury if not avoided.

Please read the warning notes given in these operating instructions!

Instructions

NOTE

Identifies important notes.

Take-action instructions are indicated by arrow points:

➢ ...

➢ Keep the order of the instructions. Alternatively, instructions may be numbered consecutively.

The designations *right*, *left*, *front* and *rear* apply as seen in travel direction.

Service

HORSCH Company would like you to be completely satisfied with your machine and our services.

If you encounter any problems, please feel free to contact your sales partner.
The service staff of our sales partners and the service employees at HORSCH will always be available to assist you.

In order to be able to solve technical problems as quickly as possible, we ask you kindly to support us.

Please help the service personnel by providing the following information to avoid unnecessary queries.

- Customer number
- Name of customer representative
- Name and address
- Machine model and serial number
- Purchasing date and operating hours or area performance
- Type of problem

Warranty claim processing

Warranty claim forms must be submitted to HORSCH through your local HORSCH sales partner.

Consequential damage

The machine has been manufactured by HORSCH with greatest care. However, despite the intended use deviations in placing quantity up to total failure may be caused by e.g.:

- damage caused by external influences
- wear of wear items
- missing or damaged tools
- incorrect travel speeds
- incorrect setting of the unit (non-observance of setting notes)
- failure to comply with the operating instructions
- blockages or seed bridging
- neglect and improper care and maintenance

Therefore, it is crucial to always check your machine before and during use for correct operation and adequate application accuracy.

Compensation claims for damages that have not occurred on the machine are excluded. This also means that any liability for consequential damages caused by travel and operating faults is excluded.

Safety and responsibility

The following warnings and safety notes apply to all sections in these operating instructions.

The machine has been built in accordance with latest technical standards and generally accepted safety regulations. However, risks for life and limb of the operator or third parties and impairment of the machine or other material assets can occur during use.

Please read and comply with the following safety notes, **before** you start to use the machine!

Intended use

The machine is intended for the application of fluids on agricultural areas. The application of crop protection agents and liquid fertilizers (AHL) on agricultural land is particularly important. The machine can be used to mix, dose and transport the biocatalyst to be placed on the application area.
The intended use also includes taking note of and observing the notes and instructions given in these operating instructions, observing all pictograms and warnings on the machine, observing all maintenance and repair intervals and complying with the defined technical limits and areas of application.

When participating with the machine in public road traffic, the respective national registration and traffic law must also be complied with.
The permissible axle loads must not be exceeded during road travel.

Any other kind of use of the machine contradicting the above, are considered not as intended, especially:

- filling the machine with flammable fluids other than those approved in the scope of the operating instructions
- exceeding the permissible technical total weight
- towing and retrieving other vehicles
- operating the machine while persons are still in the danger zone (this includes in particular transport rides on the machine)
- carrying out maintenance and/or repair work on a machine that has not been shut down or is not secured against restarting.

Horsch does not assume any liability for damages resulting from the unintended use of the machine.

Spare parts

Genuine spare parts and accessories from HORSCH have been specially designed for this machine.
Spare parts and accessories which are not delivered by us have not been tested or approved by us.
Installation or use of non-original HORSCH products may have a detrimental effect on specific design features of the machine and impair the safety of machine operators and the machine itself.
HORSCH will not assume liability whatsoever for damage resulting from the use of non-original parts and accessories.

If the component to be replaced is marked with a safety sticker, these stickers must also be ordered and attached to the spare part.

Operating Instructions

The operating instructions are a part of the machine!
Failure to comply with the operating instructions can result in severe or even fatal physical injuries.

- Read and follow the corresponding sections in the operating instructions before starting work.
- Store the operating instructions and keep for future use.
- Pass the operating instructions on to a later user.

Qualification of personnel

Unintended use of the machine can lead to severe or even fatal physical injuries. In order to prevent accidents, each person involved in work with the machine must meet the following general minimum requirements:

- The person must be physically able to keep the machine under control.
- The person is able to perform work with the machine safely within the scope of these operating instructions.
- The person is acquainted with the function of the machine within the scope of its work and is able to assess and avoid any work related dangers. The person is able to recognize and avoid work related dangers.
- The person has understood the operating instructions and is able to implement the information given in the operating instructions accordingly.
- The person is fully familiar with the safe operation of the vehicle.
- The person knows all applicable road traffic regulations and is in possession of a valid driving permit for road travel.
- A person being instructed must only work with or on the machine under the supervision of an experienced person.

The owner of the machine must

- regulate the area of responsibility, competence and monitoring of personnel.
- if necessary train and instruct the personnel.
- make the operating instructions accessible for the machine operator.
- ensure that the operator has read and fully understood the operating instructions.

Groups of operators

Persons who work with the machine must have been trained for the different activities involved.

Instructed operators

These persons must have been trained for their respective activities by the owner or other qualified experts. This refers to the following activities:

- Road transportation
- Application and set-up work
- Operation
- Maintenance
- Troubleshooting and repair

Operators trained by HORSCH

Furthermore, for certain activities the corresponding personnel must have been trained by service personnel from HORSCH. This refers to the following activities:

- Loading and transport
- Commissioning
- Troubleshooting and repair
- Waste disposal

Certain work concerning maintenance and repair must only be carried out by an expert workshop. Such work is identified with the additional comment *Workshop work*.

Children in danger

Children are not able to assess dangers and may behave unpredictably. Children are therefore especially endangered:

- Keep children away from the machine.
- Especially before drive off and before triggering machine movements you must make sure that the danger zone is free of children.
- Shut down the machine before leaving it. Children can trigger dangerous machine movements. An insufficiently secured machine parked without being attended poses a danger for playing children!

Personal protective outfit

WARNING

Health hazards caused by accidental contact with crop protection agents or spraying mixture!

Wear personal protective outfit:

- when preparing the spraying mixture
- when cleaning / replacing the spraying nozzles, during spraying operation, during all work for cleaning the machine after spraying operation.

To wear the required protective outfit always observe the operating instructions and the safety data sheet of the crop protection agent used.

Missing or incomplete protective equipment increases the risk of health damage. Personal protective equipment includes, e.g.:

- overall resistant to chemicals
- protective gloves resistant to chemicals
- shoes resistant to chemicals
- face protection
- safety goggles to protect against splashes
- Respirator
- Provide effective protective equipment in proper condition.
- Never wear rings, bracelets or other jewellery.

Wear the personal protective outfit stipulated in the safety data sheet of the crop protection agent last used when cleaning the self-propelled crop protection sprayer!

NOTE

The owner must provide the necessary personal protective outfit as specified by the manufacturer of the crop protection agent used.

NOTE

Do not enter the machine's cabin with contaminated protective outfit!

Safety in traffic

DANGER

No passengers are allowed to ride on the machine!

- Pay attention to the permissible transport widths and heights. Pay attention to the transport height when passing under bridges and low hanging overhead power lines.
- When driving on public roads comply with the respective national road traffic regulations!
- Do not exceed the permissible axle load, tyre load bearing capacity and total weight, in order to ensure sufficient steering and braking capabilities.
- The weight and speed must be chosen so that the machine can be safely managed under any condition.

- Travel characteristics, steering and braking ability are influenced by attached or hitched up equipment and ballasting weights. You should therefore pay attention to sufficient steering and braking ability!
- Check the brake and hydraulic system for apparent faults before road travel.
- The parking brake must be fully released and the service brake functioning.

For road transport the machine must be set to transport position. The folding boom must be folded up and secured. The stroke of the parallelogram and the optional rear axle steering must always be locked during road travel.

- Check lighting, warning and protective features for functioning and cleanliness.

☞ The permissible maximum speed specified in the type approval must be complied with for transport on public roads!

The specifications in the type approval document or in the technical data are decisive for the design dependent top speed.

Always match the travel mode to the road conditions to avoid accidents and damage to the undercarriage.
Consider your personal abilities, carriage way, traffic, sight and weather conditions.

☞ In addition, pay attention to the notes in chapter *Commissioning*!

Safety in operation

Commissioning

The operational safety of the machine cannot be guaranteed without orderly performed commissioning. This can lead to accidents with severe or even fatal physical injuries.

- The machine must only be put into operation after receiving instructions by employees of the authorized dealer or a HORSCH employee.
- The machine registration form must be completed and returned to HORSCH.

All protective features and safety equipment, such as detachable protective devices (wheel chocks, etc.), must be correctly in place and reliably functioning before the machine is put into operation.

- Check nuts and bolts, especially on wheels, regularly for a tight fit and re-tighten if necessary.
- Check the tyre pressure at regular intervals, see maintenance overview.

Damage to the machine

Damage to the machine can impair the operational safety of the machine and cause accidents. This can lead to severe or even fatal physical injuries.
The following machine parts are particularly important for safety:

- Hydraulics
- Brakes
- Connecting features
- Protective features
- Lighting

If in doubt about the safety-relevant status of the machine, e.g. in case of leaking operating fluids, visible damage or unexpected changes in travel behaviour:

- Immediately shut down and secure the machine.
- If possible locate and rectify the faults by following these operating instructions.
- Rectify possible causes for damage (e.g. remove dirt and tighten loose screws).
- Have damage that could affect safety and that cannot be rectified by you rectified by a qualified expert workshop.

Hydraulics

The hydraulic system is under high pressure. Escaping fluid can penetrate the skin and cause serious injuries. In the event of injury, consult a doctor immediately.

The machine's hydraulics has several functions, which can cause injury to persons or damage to the machine if operated incorrectly.

- Lock all hydraulically operated parts before any work on the hydraulic system. Depressurize the hydraulic system. Shut down the engine, engage the parking brake and pull off the ignition key.
- The hydraulic system is under high pressure. Check all lines, hoses and screwed connections regularly for leaks and any visible external damage!
- Use only appropriate means when searching for leaks. Repair any damage immediately! Oil sprays can cause injuries and fire!
- Power sockets and connectors on the hydraulic connections should be marked in order to exclude operating errors.
- In the case of injury, contact a doctor immediately!
- Secure and lock control units on the machine if not in use!
- Replace hydraulic hoses at the latest after six years, see *Maintenance overview*.

Pressure accumulator

The pressure accumulators installed in the hydraulic system are always under pressure. Always depressurize the pressure accumulator before starting work on the hydraulics.

- Do not open or work (welding, drilling) on pressure accumulators. Even when empty, the tanks are still preloaded by gas pressure.

The hydraulics must be depressurized before maintenance!

Electrics

Always disconnect the battery (negative pole) before starting work on the electric system!

- Use only the specified fuses. The use of fuses with too high a rating destroys the electric system and represents a fire hazard!
- Make sure that the battery is correctly connected. Connect the positive pole first and the negative pole after! When disconnecting disconnect the negative pole first and the positive pole after!
- Always lock the battery with the covering provided.
- Avoid sparking and naked flames in the vicinity of the battery.
- The machine can be equipped with electronic components and parts, the function of which may be affected by the transmission of electromagnetic waves from other equipment.

  In case of a subsequent installation of electric appliances and/or components on the machine, with connection to the on-board power supply, the user is responsible for checking whether this installation will cause faults in the vehicle electronics or in other components.

  Make sure that the subsequently installed electric and electronic components are in accordance with the valid issue of the EMC directive 2014/30/EC and are identified with the CE-sign.

Battery

- Maintenance work on the battery requires appropriate knowledge and proper tools!
- Keep open fire, burning matches and sparks away from the battery!
- Never check the charge level of the battery by connecting both poles to a metal object. Use a Voltmeter.
- Do not recharge a frozen battery, danger of explosion! Heat the battery up to at least 16 °C beforehand.
- Battery acid can cause severe injury by cauterization of skin and eyes. Wear protective clothing.

Cooling system

The heated up cooling system is under pressure! You should therefore only remove the radiator cap after the engine has been shut down and cooled down.

Brake system

The machine is equipped with a pneumatic or hydraulic service brake system.

- Always check the condition of the brake system before each travel.
- Immediately stop the machine in case of brake system malfunctions. Have the malfunction remedied immediately!
- Always release the parking brake before starting to drive.
- Secure the machine against rolling away and apply the parking brake.
- The brake system must be checked at regular intervals!
- Before starting work in the brake system park the machine safely and secure it against accidental lowering and rolling away (wheel chocks)!
- Be extremely careful when performing welding, torch cutting and drilling work near brake lines!
- After any setup and maintenance work on the brake system you must generally carry out a brake test!

Adjustments and repair work on the brake system must only be carried out in a professional workshop or by an operator, who has been specially trained by HORSCH for this purpose.

Overhead lines

When unfolding or folding the folding boom, the machine may reach the height of overhead lines. Possible voltage flashover to the machine may cause fatal electric shock or fire.

- Keep a safe distance to electric high voltage power lines when unfolding or folding the folding boom.
- Never unfold or fold the folding boom in the vicinity of power poles and power lines.
- With the folding boom unfolded and raised, keep a sufficient distance to electric high voltage power lines.
- Never leave or access the machine under overhead lines to avoid possible risks of electric shock or voltage flashover.
- When operating the sprayer under high voltage power lines disable the BoomControl and operate the slope compensation manually.

What to do in case of voltage flashover

Voltage flashover generates high electric voltages on the outside of the machine. This results in extreme voltage differences at the ground around the machine. Wide strides, laying on the ground or supporting yourself with your hands on the ground can cause life-threatening electric currents (pace voltage).

- Do not leave the cabin.
- Do not touch any metal objects.
- Do not create a conductive connection to ground.
- Warn persons: DO NOT come near the machine. Electric voltages at the ground can cause severe electric shock.
- Wait for professional rescuers. The overhead power line needs to be switched off.

If persons need to leave the cabin despite the voltage flashover, e.g. in case of a potential life-threatening risk of fire:

- Jump away from the machine. Ensure a safe stand when jumping. Do not touch the outside of the machine.
- Move away from the machine with short stepping strides.

Technical limiting values

If the technical limiting values of the machine are not complied with, the machine may sustain damage. This can lead to accidents with severe or even fatal physical injuries.
The following technical limiting values are of particular importance for safety:

- Permissible total weight
- maximum axle loads
- Top speed

See chapter *Technical data*, type plate and type approval.

Use in the field

⚠DANGER

No passengers are allowed to ride on the machine!

- Observe the national legislation and regulations on crop protection!
- The personal protective outfit stipulated in the safety data sheets of the crop protection agent manufacturers must be carried along and worn during work.
- Check the area immediately around the machine (for children!) before driving off and commissioning the machine. Ensure sufficient visibility.
- Check the condition of the folding boom and their mounting before use.
- Ensure sufficient stability of the machine in case of longitudinal or transverse inclination when working in uneven terrain. Observe the limit values of the machine.
- Do not remove any of the mandatory and supplied protective devices.
- Stay clear of the operating range of hydraulically operated parts.
- Use accessing aids and steps only at standstill.
- At the headland reduce the travel speed and disable spraying.
- Excessive, jerky steering movements at the beginning and the end of a curve will put extreme loads on the folding boom.
- The spraying agent may be blown away if the droplets are fine and the wind is strong. This may cause damage to people and nature!
- If the soil is very dry, the applied chemical can be blown away together with dust and cause damage. Ensure sufficient moisture of the soil!
- Ensure that the category of the tractor cabin is approved for the respective crop protection agent used.
- Always ensure a sufficient water supply in the machine to be able to wash off crop protection agent in events of emergency.
- Data concerning the preparations currently used must always be kept in the transport and safety container so that these are available for rescue services in case of accidents.
- Automatic steering must only be used for the purpose it is intended for. It must only be used in the field, away from public or semi-public roads, away from yard areas as well as far away from possibly endangered persons.

Changing equipment / wear items

- Only pulling tools may be attached that meet the technical requirements according to these operating instructions.
  HORSCH does not assume any liability for damages resulting from the attachment of non-fitting pulling tools as well as incorrect mounting.
- For machines with valid type approval only pulling tools may be attached that are covered by the type approval. Attaching pulling tools not covered by the type approval will void the registration.
- Secure the machine against unintended rolling away!
- Secure raised frame parts you have to work under with suitable supports!
- Caution! Risk of injury caused by projecting parts (e.g. folding boom parts)!
- Assume ergonomic working postures with any assembly work.

Do not step on moving or other rotating parts to climb onto the machine. You could fall and be seriously injured.

Crop protection agents and liquid fertiliser

Improper handling of crop protection agents and liquid fertiliser may cause poisoning and death.

- Follow the specifications and instructions in the safety data sheet of the crop protection agent manufacturer. If necessary, ask the dealer for the safety data sheet or safety notes.
- Determine and provide the personal protective outfit as specified by the manufacturer of the crop protection agent.
- At the time the machine is manufactured the manufacturer is aware of only a few approved crop protection agents, which could have a damaging effect on the materials used in the self-propelled crop protection sprayer.
- Store all relevant information about the crop protection agents used (safety data sheets, instructions for use, etc.) in the document compartment.
- The water quality (the water hardness and mineral content in particular) influences the property of some fertilisers and crop protection agents. Precipitation and deflocculation can cause deposits in filters and nozzles.

  Example: Extremely hard water reacts with sulphate-bearing fertiliser to form calcium sulphate (gypsum) and causes white deposits in the filters.

  Pay attention to the conditions of use and the combination possibilities given by the corresponding manufacturers to avoid such problems!
- Observe the data on compatibility of crop protection agents with materials of the self-propelled crop protection sprayer!
- Do not spray any crop protection agents that have a tendency to agglutination or solidification!
- Wear the personal protective outfit stipulated in the safety data sheet when handling crop protection agents!
- Do not eat, drink or smoke while handling crop protection agents!
- Keep crop protection equipment and crop protection agents out of the reach of children!
- Always ensure a sufficient water supply in the machine to be able to wash off crop protection agent in events of emergency.
- In case of physical contact with crop protection agents you may need to consult a physician.
- Thoroughly clean hands and face after the end of work.
- Extended exposure time of crop protection agents may cause damages to plastic components of the self-propelled crop protection sprayer. Follow the notes of the crop protection agent manufacturers.
- The application notes of the crop protection agent manufacturers must be observed when mixing different crop protection agents.

Environmental protection

Crop protection agents and liquid fertiliser as well as operating materials such as hydraulic oil, lubricants, etc. can damage the environment and the health of persons.

- Do not allow operating materials to drain out into the environment.
- Pick up drained operating materials with absorbent material or sand, fill it into a leak tight container and dispose of in accordance with statutory regulations.
- Do not fill self-propelled crop protection sprayers with water from public bodies of water.
- Filling in water protection zones is not permitted, depending on the crop protection agent used! Inquire with the “Water board” to be on the safe side!
- Observe the national and country-specific regulations and standards (e.g. water protection areas).

Retrofitting and conversions

Structural changes not approved by HORSCH may affect the functionality and operational safety of the machine and will void any warranty claim.

HORSCH is not liable for damages to life and limb as well as property damages resulting from unapproved retrofitting and conversions.

- Do not make any structural changes or extensions that have not been approved by HORSCH.
- Modifications and extensions approved by HORSCH are only to be performed at an authorized workshop or by an operator who has been trained by HORSCH for this purpose.
- Comply with country-specific instructions for weights, weight distribution and dimensions.

For equipment influencing the weight or weight distribution the regulations concerning towing facility, axle loads and total weight must be checked and complied with.

In case of changes concerning data mentioned on the type plate, a new type plate with updated data must be attached.

In case of changes which concern the data in the type approval, this type approval needs to be renewed.

Care and maintenance

Inappropriate care and maintenance puts the operational safety of the machine at risk. This can lead to accidents with severe or even fatal physical injuries.

⚠ DANGER

- **Danger of poisoning - Do not climb into the spraying mixture container!**

- Conform to prescribed schedules for repetitive tests or inspections.
- Service the machine according to the maintenance plan, see chapter *Care and maintenance*.
- Only perform the work described in these operating instructions.
- Cleaning, lubrication or adjustment work on the machine must only be carried out with the drive and engine shut down, the parking brake applied and the ignition key pulled off!
- After switching of the drives there is still a danger caused by the coasting down gyrating mass! Do not step close to the machine during this phase. Work on the machine may only be started once the machine is fully at standstill.
- Pay attention to the occurrence of mechanical, hydraulic, pneumatic and electric/electronic residual energies on the machine.

- Before starting maintenance and service work park the machine on level and firm ground and secure it against rolling away. Clean the self-propelled crop protection sprayer, especially the parts which are contaminated by spraying mixture. Wear the protective outfit stipulated in the safety data sheet when cleaning!
- Lock hydraulically operated parts and depressurise the hydraulic system.
- Prior to working on the electrical system, disconnect it from the electric current supply.
- When performing welding work on the machine, disconnect the cables from computers and other electronic components. The ground connection must be as close as possible to the welding point.
- Secure all operating media like compressed air and hydraulics against unintended commissioning.
- Secure the raised machine or raised machine parts against accidental lowering before starting maintenance, repair and cleaning work!
- Repair work inside the spraying mixture container must only be performed after thorough cleaning and wearing protective outfit with a respirator. This work must be monitored by a second person outside the spraying mixture container for safety reasons! Ensure sufficient ventilation of the spraying mixture container! Only approved qualified personnel may enter the spraying mixture container!
- Before cleaning the machine with high pressure cleaner cover all openings, which should stay clear of water, steam or cleaning agents for reasons of safety or function. Do not aim the water jet directly on electric or electronic components and bearings.
- When cleaning with high pressure cleaning equipment or steam jets keep a distance of at least 150 cm to machine components.
- After cleaning, check all hydraulic lines for leaks and loose connections.
- Check for chafing and signs of damage. Remedy any faults immediately!
- Screw connections loosened for the purpose of care and maintenance work must be retighten after work is completed.
- Dispose of oils, greases and filters according to regulations!
- If protective features are subjected to wear, they must be inspected at regular intervals and replaced in due time
- Do not clean new machines with a steam jet of a high pressure cleaner. The paint takes approx. 3 months to cure and could be damaged before this time.
- Pay attention to the following when repairing self-propelled crop protection sprayers which have been used with ammonium nitrate - carbonyl diamide solution:

  residues of ammonium nitrate - carbonyl diamide solution may form salt on or inside the spraying mixture container through the evaporation of water. This results in pure ammonium nitrate and carbonyl diamide. In its pure form, ammonium nitrate in connection with organic matter, such as carbonyl diamide, becomes explosive, if critical temperatures (caused by e.g. welding work, grinding) are reached during repair work.

  By thoroughly cleaning the spraying mixture container or the parts to be repaired with water, this risk can be eliminated, because the salt of the ammonium nitrate - carbonyl diamide solution is water-soluble.
- **All other maintenance and repair tasks, which are not described in the operating instructions, must only be carried out by an authorized professional workshop or by an operator who has been trained by HORSCH for this purpose.**

Danger zone

No person may be present in the danger zone while the machine is in operation!

The danger zone around the machine poses the following hazards:

- Accidental operation of the hydraulics can trigger dangerous movements of the machine.
- With the drive still running, machine parts may rotate or swing out.
- Hydraulically raised machine parts can lower slowly and unnoticed.
- By accidental rolling or driving of the machine.

Danger zone during operation of the machine:

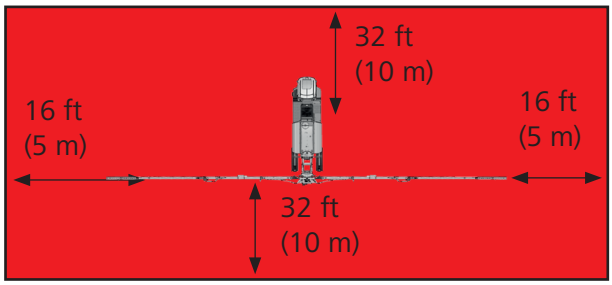

Danger zone when folding the folding boom:

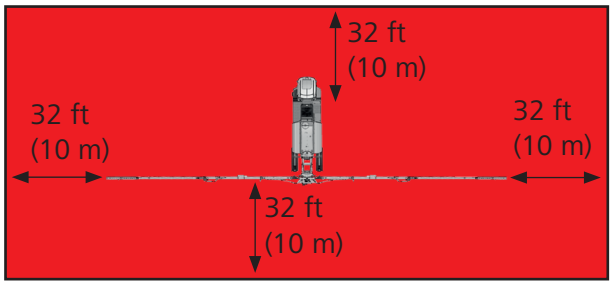

Danger zone when lifting/lowering the folding boom:

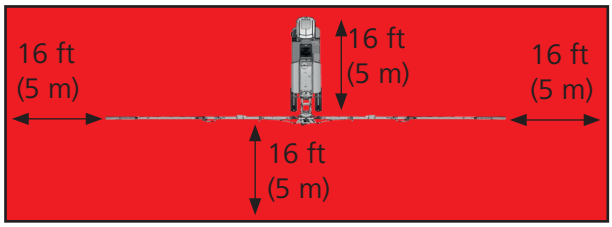

Danger zone with active BoomControl:

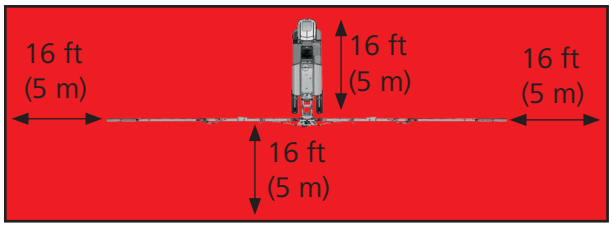

Danger zone with steering/all-wheel steering:

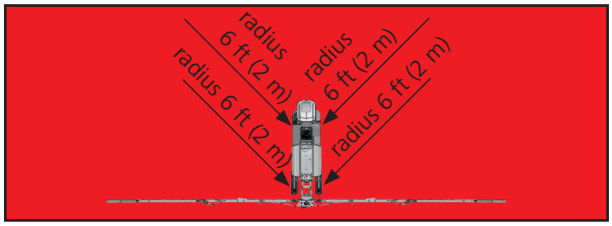

Failing to pay attention to the danger zone can result in severe or even fatal physical injuries.

- ➢ Do not stand under lifted loads. Lower such loads to the ground first.
- ➢ Before any machine movements ask persons to leave the danger zone of the machine.
- ➢ Before any work in the danger zone of the machine!
  This also applies to temporary inspection work.
  Many serious accidents happen because of carelessness and running machines!
- ➢ Pay attention to the information in all operating instructions.

Use on hillside locations

⚠ WARNING

Risk of toppling over when driving on slopes. Note the specifications regarding the maximum permissible grade in regard to the contour line of the slope! The operator must be buckled up!
High speeds, sudden changes of direction as well as fast and tight cornering may increase the risk of toppling over.
The centre of gravity of the machine moves up when the tank is filled and the folding boom lifted.

⚠ NOTE

The following specifications refer to all machines of the variants Leeb 5.280 / 6.280 / 8.280 VL, 5.300 / 6.300 / 8.300 VL, 5.280 / 6.280 VN, 5.300 / 6.300 VN with permissible tyres and adjusted air pressure.

Stability*

Track width wider than 2.60 m [8.5 ft]		
• Contour line	Without height adjustment or down	Height adjustment up
Travel direction to the left	25%	20%
Travel direction to the right	25%	20%
• Line of fall		
uphill	25%	25%
downhill	25%	25%

*Independent of folding boom height and barrel filling level

The values specified may be reduced further through certain influences. This includes:

➢ Travel mode not adjusted, e.g.:
- abrupt driving manoeuvres
- abrupt steering manoeuvres
- wobbly movements
- excessive speed
- cornering
- dynamic impact

➢ Poor ground, e.g.:
- deep tram lines
- uneven tram lines
- slippery ground
- non-load bearing ground

➢ Narrower track widths

➢ Air pressure in tyres too low

➢ Undercarriage height

Safety stickers

Safety stickers on the machine warn of hazards at dangerous points and are an important part of the safety equipment of the machine. Missing safety stickers increase the risk of severe or even fatal injuries.

- Clean soiled safety stickers.
- Damaged or illegible safety stickers must be replaced immediately.
- Affix the specified safety stickers on spare parts.

No passengers are allowed to ride on the machine!

04001455

Before commissioning the machine the operating instructions must be read and followed!

04002983

Caution for fluids spraying out under high pressure, follow the notes in the operating instructions!

04001682

Do not open or remove protective features while the engine is running!

04001457

Never reach into areas where there is a risk of crushing as long as parts could still be moving!

04001683

Stay clear of the operating range of foldable machine parts!

04002625

The pressure accumulator is charged with gas or oil pressure. Dismantle and repair only in strict compliance with the instructions in the technical manual.

04001686

Shut down the engine and pull off the key before starting maintenance and repair work.

04002983

Danger of poisoning - Never climb into the spraying mixture container.

04001456

Keep sufficient distance to hot surfaces.

04001453

Do not remain inside the range of a lifted but unsecured load.

04002626

Keep sufficient distance to electric high voltage power lines.

04002983

Secure the machine with wheel chocks before uncoupling or parking.

04002983

Before commissioning the machine the operating instructions must be read and followed!

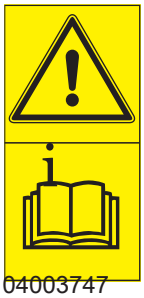

04003747

Avoid any contact with hazardous substances!
Wear protective clothing!

04003745

Danger of poisoning - no drinking water!

04002623

Fill the hand washing tank only with clear water!

04002628

The maximum operating pressure of the hydraulic system is 2900 psi [200 bar].

04002983

The engine must only be started from the driver's seat. The engine must not be started by shorting the electrical connections on the starter motor, because the machine might immediately start to move.

04003744

Do not exceed the max. flow rate of 264 gal/min [1000 l/min] when directly filling the spraying mixture container!

04004094

Switch-over ball valve Inside/outside cleaning (only for machines with outside cleaning option)

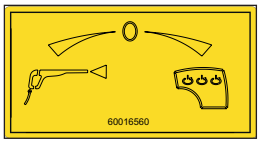

60016560

Lower the undercarriage completely before folding or unfolding to maintain the height of 13 ft [4 m] when folding! (Applies only to machines operated in Great Britain)

04008247

Attention. Risk of collision during manual partial folding of the spraying boom!

60020602

Instruction for fire extinguishing (applies only to machines operated in Russia!)

60042548

Position of safety stickers
(depending on equipment)

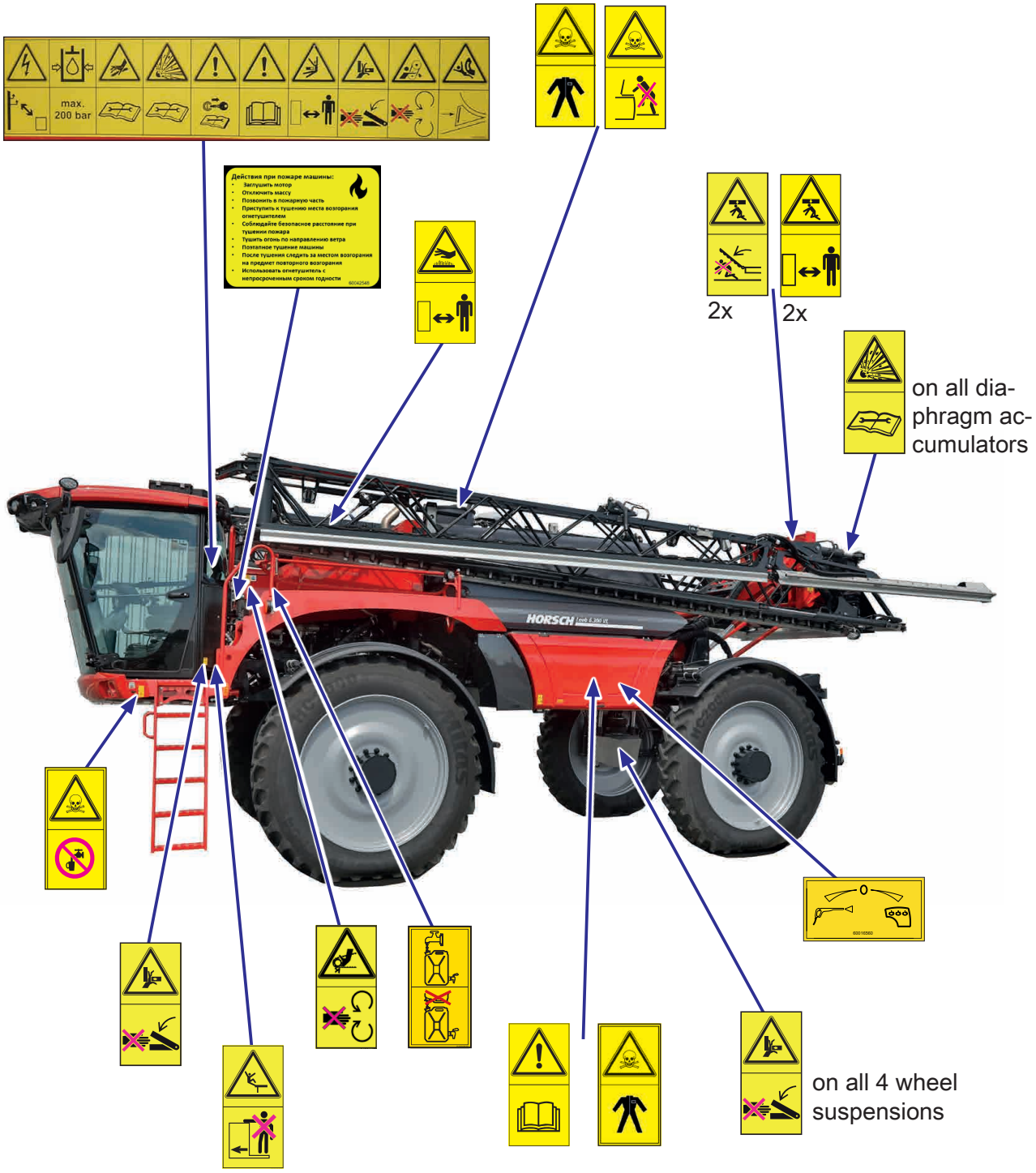

Safety stickers with the addition “2x” can be found on either side of the machine.

Position of safety stickers
(depending on equipment)

Safety stickers with the addition “2x” can be found on either side of the machine.

Commissioning

⚠ NOTE

These work activities may be carried out only by persons trained by HORSCH for this purpose.

⚠ WARNING

Increased danger of accidents during commissioning.

- Pay attention to the notes from the safety chapter!

Delivery

The machine is normally delivered completely assembled on a low loader.
If parts or assembly groups had to be disassembled for transport purposes, these will be assembled locally by our distributor or field technician.

Lifting and lashing points are identified by labels. When using other lifting points pay careful attention to the centre of gravity and the weight distribution. These points must, in any case, only be on the frame of the machine.

With all machines, the hydraulic functions are possible without additional installation.

Pneumatic level suspension (only Leeb VL)

To minimise the transport height, the folding boom for the level suspension may have been unhooked when delivered.

⚠ NOTE

The folding boom must be attached in standard operation! Bolt down the folding boom as shown.

Folding boom level suspension hooked up

Transport

Depending on country-specific regulations and working width the machine can either drive on public roads or be transported on a trailer or low loader.

- Pay attention to the operating instructions of the transport vehicle.
- On a trailer or low loader, the machine must be secured with load straps or other means.
- The permissible dimensions and weights for transport must be complied with.
- Attach lifting tackle only at the marked points.
- Note the centre of gravity of the machine when loading.
- All tanks of the sprayer be must empty.

Installation

Instruction of the operator and initial installation of the machine will be carried out by HORSCH service technicians or distributors.
Any prior use of the machine is prohibited.
The machine can only be released for operation after the instruction session conducted by our service technician / distributor and after the operating instructions have been read.

⚠ WARNING

Increased danger of accidents during installation and maintenance.
- Read these operating instructions and become acquainted with the machine before starting this work.

Depending on the scope of equipment
- Take the unattached delivered parts off the machine!
- Check all important screw connections!
- Lubricate all grease nipples!
- Check air pressure in tyres.
- Check all hydraulic connections and hoses for correct fastening and function!
- Immediately rectify any occurring damage or have it corrected!

Assemble the wheels

⚠ WARNING

Use only approved tyres as specified in the technical data.

The rims matching the tyres must be suitable for the respective loads!

Initial commissioning of the service brake system

⚠ NOTE

Test braking must be performed in the beginning with the crop protection sprayer empty and loaded to test the brake characteristics of the self-propelled crop protection sprayer. Compliance with the permissible total weight must be ensured.

Track width

Adjust the desired track width at first commissioning. Note the *Track width* section in this regard.

Height

Adjust the desired height at first commissioning. Refer to the *height adjustment* section.

⚠ CAUTION

The machine's centre of gravity shifts upward when changing the height.
- Adjust the travel mode accordingly.
- Avoid extreme situations such as driving on slopes!

Technical Data Leeb 5.280/ 6.280 / 8.280 VL (Variant Emission Standard Stage 3a)

NOTE

Payload = permissible total weight - basic weight

DANGER

Exceeding the permissible payload is prohibited. Danger of accident caused by unstable driving! Carefully determine the payload and thus the permissible filling of the machine. Not all filling media allow a complete filling of the machine.

Machine type	**5.280 VL**	**6.280 VL**	**8.280 VL**
Chassis			
Curb weight	13000 – 14500 kg [28,600 – 32,000 lbs]	13000 – 14500 kg [28,600 – 32,000 lbs]	13000 – 14500 kg [28,600 – 32,000 lbs]
max. perm. total weight on road PowerGear/High-PowerGear	18,000 / 20,000 kg [40,000 / 44,000 lbs]	18,000 / 20,000 kg [40,000 / 44,000 lbs]	18,000 / 20,000 kg [40,000 / 44,000 lbs]
max. total length in transport position	11.7 m [460 in]	11.7 m [460 in]	11.7 m [460 in]
Transport height with lowered pneumatic suspension*	3.9 m [152 in]	3.9 m [152 in]	3.9 m [152 in]
Wheel base	4.3 m [169 in]	4.3 m [169 in]	4.3 m [169 in]
Ground clearance*	1.6 m [63 in] optional: 2.0 m [70 in]	1.6 m [63 in] optional: 2.0 m [70 in]	1.6 m [63 in] optional: 2.0 m [70 in]
Engine			
FPT (Diesel)	N67		
Power	210 kW [280 HP]		
Number of cylinders / cooling	6 / water / turbo with intercooler		
Displacement	6,700 cm³ [408 cu in]		
Rated speed	2000 rpm		
Torque at speed	1035 Nm [763 lb ft] @ 1500 rpm		
Control	Electric SAE J1939		
Hopper capacity	450 l [118 gal]		

Machine type	5.280 VL	6.280 VL	8.280 VL
Gearbox			
Gearbox type	Wheel hub gearbox		
Work areas	Field / road		
Transmission	hydrostatic infinite		
Speeds	Field	0 – 25 km/h [0 – 15 mph] Folding boom folded in	
		0 – 32 km/h [0 – 20 mph] Folding boom unfolded	
	Road	0 – 40 km/h [0 – 25 mph]	
		0 – 50 km/h [0 – 31 mph]	
Drive	permanent all-wheel drive		
	Road: from 30 km/h [18 mph] front wheel drive		
Undercarriage / axles			
Front axle / rear axle	Independent suspension on sliding frame		
Suspension	Pneumatic suspension		
Steering			
Front axle	hydraulic		
Rear axle	hydraulic-electric automatic centring and interlocking for road travel		
Steering modes	only front axle steering / all-wheel steering automatically centring / manual steering / slope mode		
Brake system			
Service brake front axle/rear axle	High performance brake + lamella		
Parking brake	Wet disc spring accumulator on all 4 wheels		
Hydraulic system			
1 Main pump (spraying pump/fan)	quantity-controlled variable displacement pump		
2 Main pump (working hydraulics)	quantity-controlled variable displacement pump		
Power	320 l/min [84 gal/min]		
Working pressure	200 bar [2,900 psi]		
Hydraulic tank	100 l [26 gal]		

Machine type	5.280 VL	6.280 VL	8.280 VL
Vehicle electronics			
Operating voltage	12 V		
Battery	12 V [180 Ah]		
Three-phase alternator	12 V / 200 A		
Starter	12 V / 4 kW		
Attachment			
Sections min/max (piece)			
Pulse width modulation	Single nozzle control		
Pneumatic nozzles	6 / 42		
Working height*	300 – 2800 mm [12 - 110 in]		
Centrifugal pump capacity	1000 l/min [264 gal/min] at 0 bar [psi] – suction height = pump height		
max. working pressure	8 bar [116 psi]		
Working speed	4 – 32 km/h [2.5 – 20 mph]		
Solution tank			
Spraying mixture container rated volume	5000 l [1,300 gal]	6000 l [1,600 gal]	8000 l [2,100 gal]
Actual volume spraying mixture container	5500 l [1,450 gal]	6,400 l [1,700 gal]	8400 l [2200 gal]
Fresh water tank	750 l [200 gal]		
Hand washing tank	15 l [4 gal]		
Illuviation valve, plastic	35 l [9 gal]		
Illuviation valve, stainless steel (option)	52 l [14 gal]		
Spraying boom			
Working widths	17 / 30 m 5-piece		
(reduced working width)	(17) / 36 m 5-piece		
	[58 / 100 ft 5-piece]		
	[58 / 120 ft 5-piece]		

Machine type	5.280 VL	6.280 VL	8.280 VL
Technical residual quantity incl. pump***			
• Level	On request		
• Contour line			
15% travel direction to the left	On request		
15% travel direction to the right	On request		
• Line of fall			
15% uphill	On request		
15% downhill	On request		
Central control	electric, pneumatic single nozzle control		
Spraying pressure adjustment	electric		
Spraying pressure - adjustment range	1 bar – 8 bar [0.07 psi – 0.55 psi]		
Spraying pressure gauge	digital		
Pressure filter	80 (50/100) meshes		
Agitator	adjustable / interruptible to 4 stages		
Placing quantity control	Speed dependent via job computer		
Jet height* at 1.6 m [62 in] ground clearance	300 – 2800 mm [11 – 110 in]		
Jet height* at 2.0 m [78 in] ground clearance	700 – 3200 mm [28 – 125 in]		

All dimensions and weights depend on boom width, tyres and equipment.
* Information depending on selected tyres
** Driving is possible on these slopes, but restrictions must be expected regarding technical residue, placement of the residue, emptying of the tank, indication of the filling level, placement accuracy
*** depending on folding boom variant, incl. use of air function

NOTE:
- Deviations due to technical further development reserved.
- The dimensions may vary depending on the machine equipment and design of the folding boom.
- The weight of the machine depends on the equipment.
- The permissible transport heights and transport width for road traffic may differ from country to country. Comply with the national registration regulations.

Technical Data Leeb 5.300 / 6.300 / 8.300 VL (Variant Emission Standard Stage 5)

NOTE

Payload = permissible total weight - basic weight

DANGER

Exceeding the permissible payload is prohibited. Danger of accident caused by unstable driving! Carefully determine the payload and thus the permissible filling of the machine. Not all filling media allow a complete filling of the machine.

Machine type	**5.300 VL**	**6.300 VL**	**8.300 VL**
Chassis			
Curb weight	13000 – 14500 kg [28,600 – 32,000 lbs]	13000 – 14500 kg [28,600 – 32,000 lbs]	13000 – 14500 kg [28,600 – 32,000 lbs]
max. perm. total weight on road PowerGear/High-PowerGear	18,000 / 20,000 kg [40,000 / 44,000 lbs]	18,000 / 20,000 kg [40,000 / 44,000 lbs]	18,000 / 20,000 kg [40,000 / 44,000 lbs]
max. total length in transport position	11.7 m [460 in]	11.7 m [460 in]	11.7 m [460 in]
Transport height with lowered pneumatic suspension*	3.9 m [152 in]	3.9 m [152 in]	3.9 m [152 in]
Wheel base	4.3 m [169 in]	4.3 m [169 in]	4.3 m [169 in]
Ground clearance*	1.6 m [63 in] optional: 2.0 m [70 in]	1.6 m [63 in] optional: 2.0 m [70 in]	1.6 m [63 in] optional: 2.0 m [70 in]

Machine type	5.300 VL	6.300 VL	8.300 VL
Engine			
FPT (Diesel)	N67		
Power	230 kW [310 HP]		
Number of cylinders / cooling	6 / water / turbo with intercooler		
Displacement	6,700 cm³ [408 cu in]		
Rated speed	2000 rpm		
Torque at speed	1160 Nm [855 lb ft] @ 1500 rpm		
Control	Electric SAE J1939		
Hopper capacity	450 l [118 gal]		
Tank capacity AdBlue	approx. 45 l [11 gal]		
Gearbox			
Gearbox type	Wheel hub gearbox		
Work areas	Field / road		
Transmission	hydrostatic infinite		
Speeds	Field	0 – 25 km/h [0 – 15 mph] Folding boom folded in	
		0 – 32 km/h [0 – 20 mph] Folding boom unfolded	
	Road	0 – 40 km/h [0 – 25 mph]	
		0 – 50 km/h [0 – 31 mph]	
Drive	permanent all-wheel drive		
	Road: from 30 km/h [18 mph] front wheel drive		
Undercarriage / axles			
Front axle / rear axle	Independent suspension on sliding frame		
Suspension	Pneumatic suspension		
Steering			
Front axle	hydraulic		
Rear axle	hydraulic-electric automatic centring and interlocking for road travel		
Steering modes	only front axle steering / all-wheel steering automatically centring / manual steering / slope mode		

Machine type	5.300 VL	6.300 VL	8.300 VL
Brake system			
Service brake front axle/rear axle	High performance brake + lamella		
Parking brake	Wet disc spring accumulator on all 4 wheels		
Hydraulic system			
1 Main pump (spraying pump/fan)	quantity-controlled variable displacement pump		
2 Main pump (working hydraulics)	quantity-controlled variable displacement pump		
Power	320 l/min [84 gal/min]		
Working pressure	200 bar [2,900 psi]		
Hydraulic tank	100 l [26 gal]		
Vehicle electronics			
Operating voltage	12 V		
Battery	12 V (180 Ah)		
Three-phase alternator	12 V / 200 A		
Starter	12 V / 4 kW		
Attachment			
Sections min/max (piece)			
Pulse width modulation	Single nozzle control		
Pneumatic nozzles	6 / 42		
Working height*	300 – 2800 mm [12 - 110 in]		
Centrifugal pump capacity	1000 l/min [264 gal/min] at 0 bar [psi] – suction height = pump height		
max. working pressure	8 bar [116 psi]		
Working speed	4 – 32 km/h [2.5 – 20 mph]		
Solution tank			
Spraying mixture container rated volume	5000 l [1,300 gal]	6000 l [1,600 gal]	8000 l [2,100 gal]
Actual volume spraying mixture container	5500 l [1,450 gal]	6,400 l [1,700 gal]	8400 l [2200 gal]
Fresh water tank	750 l [200 gal]		
Hand washing tank	15 l [4 gal]		
Illuviation valve, plastic	35 l [9 gal]		
Illuviation valve, stainless steel (option)	52 l [14 gal]		

Machine type	5.300 VL	6.300 VL	8.300 VL
Spraying boom			
Working widths	17 / 30 m 5-piece		
	(17) / 36 m 5-piece		
	[58 / 100 ft 5-piece]		
	[58 / 120 ft 5-piece]		
Technical residual quantity incl. pump***			
• Level	On request		
• Contour line			
15% travel direction to the left	On request		
15% travel direction to the right	On request		
• Line of fall			
15% uphill	On request		
15% downhill	On request		
Central control	electric, pneumatic single nozzle control		
Spraying pressure adjustment	Electric		
Spraying pressure - adjustment range	1 bar – 8 bar [0.07 psi – 0.55 psi]		
Spraying pressure gauge	digital		
Pressure filter	80 (50/100) meshes		
Agitator	adjustable / interruptible to 4 stages		
Placing quantity control	Speed dependent via job computer		
Jet height* at 1.6 m [62 in] ground clearance	300 – 2800 mm [11 – 110 in]		
Jet height* at 2.0 m [78 in] ground clearance	700 – 3200 mm [28 – 125 in]		

All dimensions and weights depend on boom width, tyres and equipment.
* Information depending on selected tyres
** Driving is possible on these slopes, but restrictions must be expected regarding technical residue, placement of the residue, emptying of the tank, indication of the filling level, placement accuracy
*** depending on folding boom variant, incl. use of air function

NOTE:
- Deviations due to technical further development reserved.
- The dimensions may vary depending on the machine equipment and design of the folding boom.
- The weight of the machine depends on the equipment.
- The permissible transport heights and transport width for road traffic may differ from country to country. Comply with the national registration regulations.

Technical Data Leeb 5.280 / 6.280 VN (Variant Emission Standard Stage 3a)

NOTE

Payload = permissible total weight - basic weight

DANGER

Exceeding the permissible payload is prohibited. Danger of accident caused by unstable driving! Carefully determine the payload and thus the permissible filling of the machine. Not all filling media allow a complete filling of the machine.

Machine type	**5,280 VN**	**6,280 VN**
Chassis		
Curb weight	13000 – 14500 kg [28,600 – 32,000 lbs]	13000 – 14500 kg [28,600 – 32,000 lbs]
max. perm. total weight on road PowerGear/HighPowerGear	18,000 / 20,000 kg [40,000 / 44,000 lbs]	18,000 / 20,000 kg [40,000 / 44,000 lbs]
max. total length in transport position	11.7 m [460 in]	11.7 m [460 in]
Transport height with lowered pneumatic suspension*	3.9 m [152 in]	3.9 m [152 in]
Wheel base	4.3 m [169 in]	4.3 m [169 in]
Ground clearance*	1.6 m [63 in] optional: 2.0 m [70 in]	1.6 m [63 in] optional: 2.0 m [70 in]
Engine		
FPT (Diesel)	N67	
Power	210 kW [280 HP]	
Number of cylinders / cooling	6 / water / turbo with intercooler	
Displacement	6,700 cm³ [408 cu in]	
Rated speed	2000 rpm	
Torque at speed	1035 Nm [763 lb ft] @ 1500 rpm	
Control	Electric SAE J1939	
Hopper capacity	450 l [118 gal]	

Machine type	5,280 VN	6,280 VN
Gearbox		
Gearbox type	Wheel hub gearbox	
Work areas	Field / road	
Transmission	hydrostatic infinite	
Speeds	Field	0 – 25 km/h [0 – 15 mph] Folding boom folded in
		0 – 32 km/h [0 – 20 mph] Folding boom unfolded
	Road	0 – 40 km/h [0 – 25 mph]
		0 – 50 km/h [0 – 31 mph]
Drive	permanent all-wheel drive	
	Road: from 30 km/h [18 mph] front wheel drive	
Undercarriage / axles		
Front axle / rear axle	Independent suspension on sliding frame	
Suspension	Pneumatic suspension	
Steering		
Front axle	hydraulic	
Rear axle	hydraulic-electric automatic centring and interlocking for road travel	
Steering modes	only front axle steering / all-wheel steering automatically centring / manual steering / slope mode	
Brake system		
Service brake front axle/rear axle	High performance brake + lamella	
Parking brake	Wet disc spring accumulator on all 4 wheels	
Hydraulic system		
1 Main pump (spraying pump/fan)	quantity-controlled variable displacement pump	
2 Main pump (working hydraulics)	quantity-controlled variable displacement pump	
Power	320 l/min [84 gal/min]	
Working pressure	200 bar [2,900 psi]	
Hydraulic tank	100 l [26 gal]	

Machine type	5,280 VN	6,280 VN
Vehicle electronics		
Operating voltage	12 V	
Battery	12 V [180 Ah]	
Three-phase alternator	12 V / 200 A	
Starter	12 V / 4 kW	
Attachment		
Sections min/max (piece)		
Pulse width modulation	Single nozzle control	
Pneumatic nozzles	6 / 42	
Working height*	300 – 2800 mm [12 - 110 in]	
Centrifugal pump capacity	1000 l/min [264 gal/min] at 0 bar [psi] – suction height = pump height	
max. working pressure	8 bar [116 psi]	
Working speed	4 – 32 km/h [2.5 – 20 mph]	
Solution tank		
Spraying mixture container rated volume	5000 l [1,300 gal]	6000 l [1,600 gal]
Actual volume spraying mixture container	5500 l [1,450 gal]	6,400 l [1,700 gal]
Fresh water tank	750 l [200 gal]	
Hand washing tank	15 l [4 gal]	
Illuviation valve, plastic	35 l [9 gal]	
Illuviation valve, stainless steel (option)	52 l [14 gal]	
Spraying boom		
Working widths	17 / 30 m 5-piece	
(reduced working width)	(17) / 36 m 5-piece	
	[58 / 100 ft 5-piece]	
	[58 / 120 ft 5-piece]	

Machine type	5,280 VN	6,280 VN
Technical residual quantity incl. pump***		
• Level	On request	
• Contour line		
15% travel direction to the left	On request	
15% travel direction to the right	On request	
• Line of fall		
15% uphill	On request	
15% downhill	On request	
Central control	electric, pneumatic single nozzle control	
Spraying pressure adjustment	Electric	
Spraying pressure - adjustment range	1 bar – 8 bar [0.07 psi – 0.55 psi]	
Spraying pressure gauge	digital	
Pressure filter	80 (50/100) meshes	
Agitator	adjustable / interruptible to 4 stages	
Placing quantity control	Speed dependent via job computer	
Jet height* at 1.6 m [62 in] ground clearance	300 – 2800 mm [11 – 110 in]	
Jet height* at 2.0 m [78 in] ground clearance	700 – 3200 mm [28 – 125 in]	

All dimensions and weights depend on boom width, tyres and equipment.
* Information depending on selected tyres
** Driving is possible on these slopes, but restrictions must be expected regarding technical residue, placement of the residue, emptying of the tank, indication of the filling level, placement accuracy
*** depending on folding boom variant, incl. use of air function

NOTE:
- Deviations due to technical further development reserved.
- The dimensions may vary depending on the machine equipment and design of the folding boom.
- The weight of the machine depends on the equipment.
- The permissible transport heights and transport width for road traffic may differ from country to country. Comply with the national registration regulations.

Technical Data Leeb 5.300 / 6.300 VN (Emission Standard Stage 5 Variant)

NOTE

Payload = permissible total weight - basic weight

DANGER

Exceeding the permissible payload is prohibited. Danger of accident caused by unstable driving! Carefully determine the payload and thus the permissible filling of the machine. Not all filling media allow a complete filling of the machine.

Machine type	**5,300 VN**	**6,300 VN**
Chassis		
Curb weight	13000 – 14500 kg [28,600 – 32,000 lbs]	13000 – 14500 kg [28,600 – 32,000 lbs]
max. perm. total weight on road Power-Gear/HighPowerGear	18,000 / 20,000 kg [40,000 / 44,000 lbs]	18,000 / 20,000 kg [40,000 / 44,000 lbs]
max. total length in transport position	11.7 m [460 in]	11.7 m [460 in]
Transport height with lowered pneumatic suspension*	3.9 m [152 in]	3.9 m [152 in]
Wheel base	4.3 m [169 in]	4.3 m [169 in]
Ground clearance*	1.6 m [63 in] optional: 2.0 m [70 in]	1.6 m [63 in] optional: 2.0 m [70 in]

Machine type	5,300 VN	6,300 VN
Engine		
FPT (Diesel)	N67	
Power	230 kW [310 HP]	
Number of cylinders / cooling	6 / water / turbo with intercooler	
Displacement	6,700 cm³ [408 cu in]	
Rated speed	2000 rpm	
Torque at speed	1160 Nm [855 lb ft] @ 1500 rpm	
Control	Electric SAE J1939	
Hopper capacity	450 l [118 gal]	
Tank capacity AdBlue	approx. 45 l [11 gal]	
Gearbox		
Gearbox type	Wheel hub gearbox	
Work areas	Field / road	
Transmission	hydrostatic infinite	
Speeds	Field	0 – 25 km/h [0 – 15 mph] Folding boom folded in
		0 – 32 km/h [0 – 20 mph] Folding boom unfolded
	Road	0 – 40 km/h [0 – 25 mph]
		0 – 50 km/h [0 – 31 mph]
Drive	permanent all-wheel drive	
	Road: from 30 km/h [18 mph] front wheel drive	
Undercarriage / axles		
Front axle / rear axle	Independent suspension on sliding frame	
Suspension	Hydropneumatic suspension	
Steering		
Front axle	hydraulic	
Rear axle	hydraulic-electric automatic centring and interlocking for road travel	
Steering modes	only front axle steering / all-wheel steering automatically centring / manual steering / slope mode	

Machine type	5,300 VN	6,300 VN
Brake system		
Service brake front axle/rear axle	High performance brake + lamella	
Parking brake	Wet disc spring accumulator on all 4 wheels	
Hydraulic system		
1 Main pump (spraying pump/fan)	quantity-controlled variable displacement pump	
2 Main pump (working hydraulics)	quantity-controlled variable displacement pump	
Power	320 l/min [84 gal/min]	
Working pressure	200 bar [2,900 psi]	
Hydraulic tank	100 l [26 gal]	
Vehicle electronics		
Operating voltage	12 V	
Battery	12 V (180 Ah)	
Three-phase alternator	12 V / 200 A	
Starter	12 V / 4 kW	
Attachment		
Sections min/max (piece)		
Pulse width modulation	Single nozzle control	
Pneumatic nozzles	6 / 42	
Working height*	300 – 2800 mm [12 - 110 in]	
Centrifugal pump capacity	1000 l/min [264 gal/min] at 0 bar [psi] – suction height = pump height	
max. working pressure	8 bar [116 psi]	
Working speed	4 – 32 km/h [2.5 – 20 mph]	
Solution tank		
Spraying mixture container rated volume	5000 l [1,300 gal]	6000 l [1,600 gal]
Actual volume spraying mixture container	5500 l [1,450 gal]	6,400 l [1,700 gal]
Fresh water tank	750 l [200 gal]	
Hand washing tank	15 l [4 gal]	
Illuviation valve, plastic	35 l [9 gal]	
Illuviation valve, stainless steel (option)	52 l [14 gal]	

Machine type	5,300 VN	6,300 VN
Spraying boom		
Working widths	17 / 30 m 5-piece	
	(17) / 36 m 5-piece	
	[58 / 100 ft 5-piece]	
	[58 / 120 ft 5-piece]	
Technical residual quantity incl. pump***		
• Level	On request	
• Contour line		
15% travel direction to the left	On request	
15% travel direction to the right	On request	
• Line of fall		
15% uphill	On request	
15% downhill	On request	
Central control	electric, pneumatic single nozzle control	
Spraying pressure adjustment	Electric	
Spraying pressure - adjustment range	1 bar – 8 bar [0.07 psi – 0.55 psi]	
Spraying pressure gauge	digital	
Pressure filter	80 (50/100) meshes	
Agitator	adjustable / interruptible to 4 stages	
Placing quantity control	Speed dependent via job computer	
Jet height* at 1.6 m [62 in] ground clearance	300 – 2800 mm [11 – 110 in]	
Jet height* at 2.0 m [78 in] ground clearance	700 – 3200 mm [28 – 125 in]	
All dimensions and weights depend on boom width, tyres and equipment. * Information depending on selected tyres ** Driving is possible on these slopes, but restrictions must be expected regarding technical residue, placement of the residue, emptying of the tank, indication of the filling level, placement accuracy *** depending on folding boom variant, incl. use of air function		
All dimensions and weights depend on boom width, tyres and equipment. * Information depending on selected tyres ** Driving is possible on these slopes, but restrictions must be expected regarding technical residue, placement of the residue, emptying of the tank, indication of the filling level, placement accuracy *** depending on folding boom variant, incl. use of air function		

NOTE:
- Deviations due to technical further development reserved.
- The dimensions may vary depending on the machine equipment and design of the folding boom.
- The weight of the machine depends on the equipment.
- The permissible transport heights and transport width for road traffic may differ from country to country. Comply with the national registration regulations.

Type plate

The type plate with the CE marking is located on the frame of the right machine side. Refer to the correct tape plate according to the series status!
Data on the type plate:

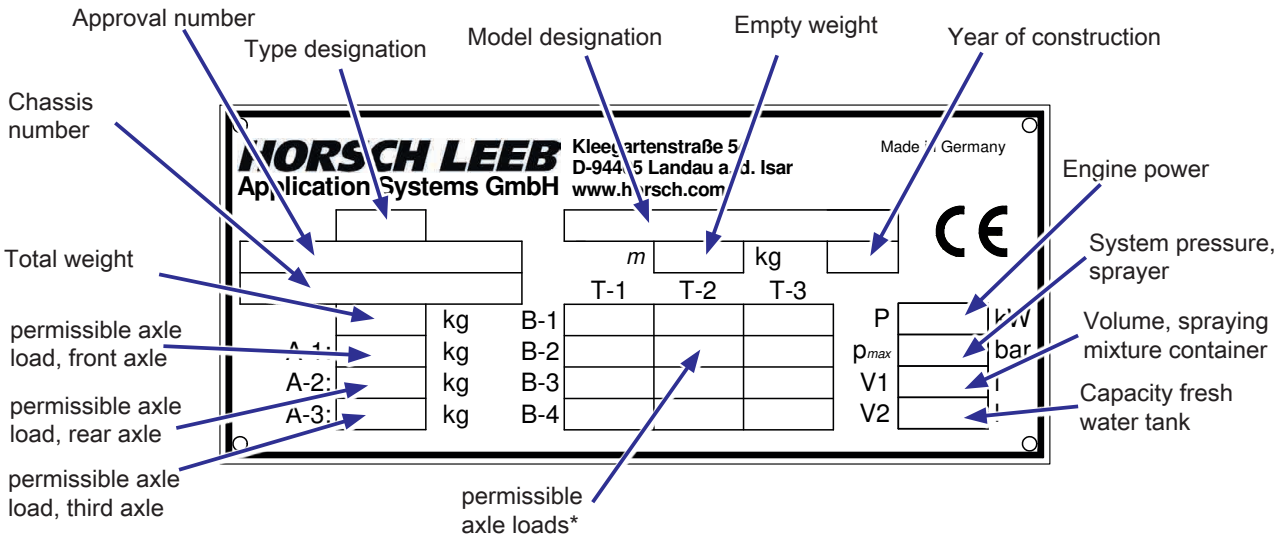

*Permissible trailed loads (for machines with drawbar eye)

B-1	unbraked	T-1	Drawbar-trailed vehicle
B-2	inertia braking system	T-2	rigid drawbar-trailed vehicle
B-3	hydraulically braked	T-3	central axle-trailed vehicle
B-4	pneumatically braked		

Dimensions

Data in mm

Leeb 5,280 / 6,280 / 8.280 VL
Leeb 5,300 / 6,300 / 8.300 VL

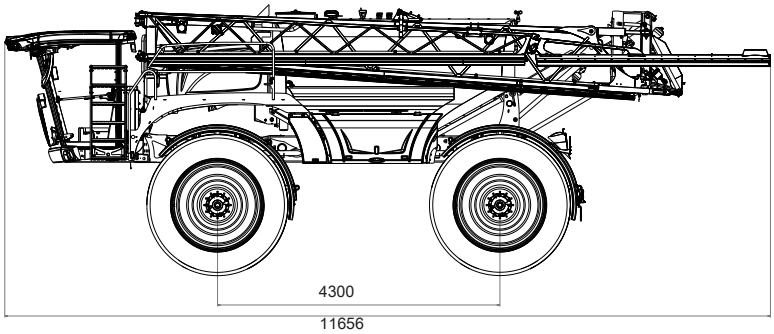

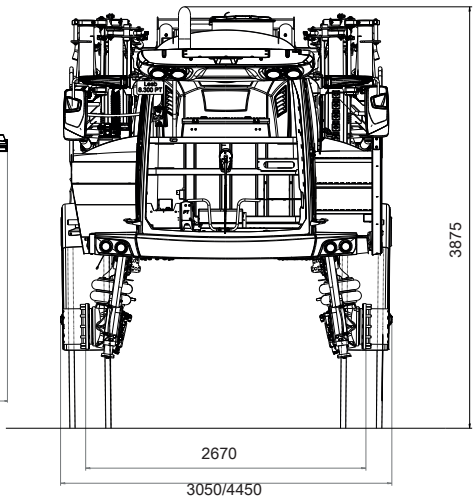

Leeb 5,280 / 6.280 VN
Leeb 5,300 / 6.300 VN

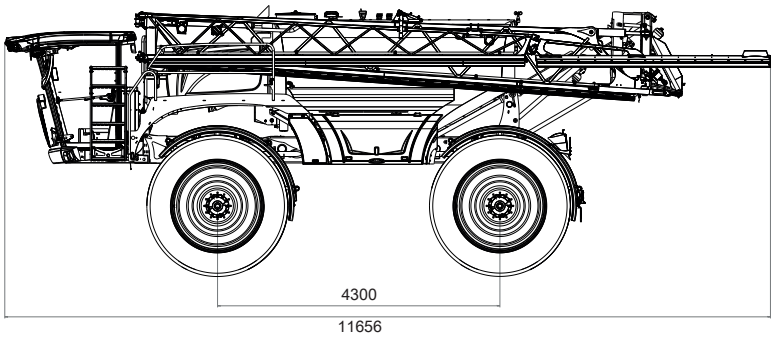

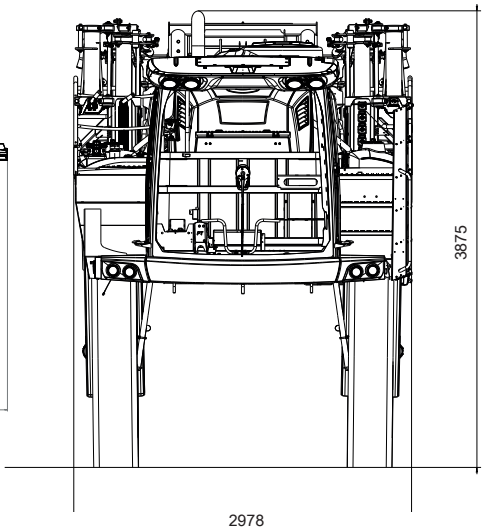

NOTE:
- Deviations due to technical further development reserved.
- The dimensions may vary depending on the machine equipment and design of the folding boom.
- The weight of the machine depends on the equipment.
- The permissible transport heights and transport width for road traffic may differ from country to country. Comply with the national registration regulations.

Weight and tyres

The permissible total weight of the machine is the smaller value from:

- permissible axle load (PowerGear/High PowerGear)
- permissible tyre load bearing capacity of the four wheels

NOTE

When using the machine, the permissible total weight must not exceed the values of the country-specific specifications.

The values for determining the permissible total weight can be taken from the following tables.

Flange dimension	
Leeb VL narrow base frame	2.67 – 3.57 m
Leeb VL wide base frame	3.07 – 4.17 m
Leeb VN	2.32 – 3.07 m

NOTE

The specifications reflect the current status at the date of print of the operating instructions. Contact the respective tyre manufacturer for more information.

NOTE

Die possible maximum speed depends on the registration of the vehicle!

WARNING

Never choose an air pressure lower than the one mentioned in the table above.
Risk of accident! The stability of the vehicle is no longer ensured.

Ceat Farmax RC 380/90 R46								
Load index: 165B								
Pressing depth: +35								
Air pres-sure	Speed			Permissible total weight of machine		Track width		
	25 km/h	40 km/h	50 km/h	Power-Gear	High PowerGear	Leeb VL narrow base frame	Leeb VL wide base frame	Leeb VN
	[16 mph]	[25 mph]	[31 mph]	22000 kg [48500 lbs]	25000 kg [55115 lbs]	2.60 – 3.50 m [102 – 137 in]	3.00 – 4.10 m [118 – 161 in]	2.25 – 3.00 m [89 – 118 in]
	Permissible load capacity			Minimum transport width				
				Leeb VL narrow base frame with wheels / without wheels		Leeb VL wide base frame with wheels / without wheels		Leeb VL with wheels / without wheels
3.5 bar	5120 kg	4570 kg	4270 kg	3.20 m / 3.10 m [126 in / 122 in]		3.60 m / 3.49 m [142 in / 137 in]		2.98 m / 2.98 m [117 in / 117 in]
[51 psi]	[11288 lbs]	[10075 lbs]	[9414 lbs]					
4 bar	5540 kg	4940 kg	4620 kg					
[58 psi]	[12214 lbs]	[10890 lbs]	[10185 lbs]					
4.4 bar	5870 kg	5230 kg	4890 kg					
[64 psi]	[12941 lbs]	[11530 lbs]	[10780 lbs]					
4.8 bar	6180 kg	5510 kg	5150 kg					
[70 psi]	[13625 lbs]	[12148 lbs]	[11354 lbs]					

Alliance 350 380/105 R50								
Load index: 168 D								
Pressing depth: +35								
Air pres-sure	Speed			Permissible total weight of machine		Track width		
	25 km/h	40 km/h	50 km/h	Power-Gear	High PowerGear	Leeb VL narrow base frame	Leeb VL wide base frame	Leeb VN
	[16 mph]	[25 mph]	[31 mph]	22000 kg [48500 lbs]	25000 kg [55115 lbs]	2.60 – 3.50 m [102 – 137 in]	3.00 – 4.10 m [118 – 161 in]	2.25 – 3.00 m [89 – 118 in]
	Permissible load capacity			Minimum transport width				
				Leeb VL narrow base frame with wheels / without wheels		Leeb VL wide base frame with wheels / without wheels		Leeb VL with wheels / without wheels
1.2 bar	3100 kg	2870 kg	2750 kg	3.20 m / 3.10 m [126 in / 122 in]		3.60 m / 3.49 m [142 in / 137 in]		2.98 m / 2.98 m [117 in / 117 in]
[17 psi]	[6834 lbs]	[6327 lbs]	[6062 lbs]					
2 bar	4180 kg	3870 kg	3710 kg					
[29 psi]	[9215 lbs]	[8532 lbs]	[8179 lbs]					
2.8 bar	5870 kg	4710 kg	4520 kg					
[41 psi]	[11244 lbs]	[10384 lbs]	[9965 lbs]					
3.6 bar	5900 kg	5450 kg	5230 kg					
[52 psi]	[13007 lbs]	[12015 lbs]	[11530 lbs]					

BKT Agrimax Spargo VF 380/105 R 50								
Load index: 179D								
Pressing depth: +35								
Air pres-sure	Speed			Permissible total weight of machine		Track width		
	25 km/h	40 km/h	50 km/h	Power-Gear	High PowerGear	Leeb VL narrow base frame	Leeb VL wide base frame	Leeb VN
	[16 mph]	[25 mph]	[31 mph]	22000 kg [48500 lbs]	25000 kg [55115 lbs]	2.60 – 3.50 m [102 – 137 in]	3.00 – 4.10 m [118 – 161 in]	2.25 – 3.00 m [89 – 118 in]
	Permissible load capacity			Minimum transport width				
				Leeb VL narrow base frame with wheels / without wheels		Leeb VL wide base frame with wheels / without wheels		Leeb VL with wheels / without wheels
2.2 bar	5195 kg	5195 kg	5195 kg	3.20 m / 3.10 m [126 in / 122 in]		3.60 m / 3.49 m [142 in / 137 in]		2.98 m / 2.98 m [117 in / 117 in]
[32 psi]	[11453 lbs]	[11453 lbs]	[11453 lbs]					
2.6 bar	5735 kg	5735 kg	5735 kg					
[87 psi]	[12644 lbs]	[12644 lbs]	[12644 lbs]					
3.2 bar	6510 kg	6510 kg	6510 kg					
[46 psi]	[14352 lbs]	[14352 lbs]	[14352 lbs]					
3.6 bar	6900 kg	6900 kg	6900 kg					
[52 psi]	[15212 lbs]	[15212 lbs]	[15212 lbs]					

Mitas HC 2000 VF 380/105 R54								
Load index: 168B								
Pressing depth: +35								
Air pres-sure	Speed			Permissible total weight of machine		Track width		
	25 km/h	40 km/h	50 km/h	Power-Gear	High PowerGear	Leeb VL narrow base frame	Leeb VL wide base frame	Leeb VN
	[16 mph]	[25 mph]	[31 mph]	22000 kg [48500 lbs]	25000 kg [55115 lbs]	2.60 – 3.50 m [102 – 137 in]	3.00 – 4.10 m [118 – 161 in]	2.25 – 3.00 m [89 – 118 in]
	Permissible load capacity			Minimum transport width				
				Leeb VL narrow base frame with wheels / without wheels		Leeb VL wide base frame with wheels / without wheels		Leeb VL with wheels / without wheels
1.2 bar	4160 kg	4000 kg	4000 kg	3.20 m / 3.10 m [126 in / 122 in]		3.60 m / 3.49 m [142 in / 137 in]		2.98 m / 2.98 m [117 in / 117 in]
[17 psi]	[9171 lbs]	[8818 lbs]	[8818 lbs]					
1.6 bar	4940 kg	4750 kg	4750 kg					
[23 psi]	[10891 lbs]	[10472 lbs]	[10472 lbs]					
2.0 bar	5510 kg	5300 kg	5300 kg					
[29 psi]	[12147 lbs]	[11685 lbs]	[11685 lbs]					
2.4 bar	5825 kg	5600 kg	5600 kg					
[35 psi]	[12842 lbs]	[12346 lbs]	[12346 lbs]					

Michelin SprayBib VF 420/95 R50								
Load index: 177D								
Pressing depth: +35								
Air pres-sure	**Speed**			**Permissible total weight of machine**		**Track width**		
	25 km/h	40 km/h	50 km/h	Power-Gear	High PowerGear	Leeb VL narrow base frame	Leeb VL wide base frame	Leeb VN
	[16 mph]	[25 mph]	[31 mph]	22000 kg [48500 lbs]	25000 kg [55115 lbs]	2.60 – 3.50 m [102 – 137 in]	3.00 – 4.10 m [118 – 161 in]	2.25 – 3.00 m [89 – 118 in]
	Permissible load capacity			**Minimum transport width**				
				Leeb VL narrow base frame with wheels / without wheels		Leeb VL wide base frame with wheels / without wheels		Leeb VL with wheels / without wheels
1.8 bar	5150 kg	5150 kg	5150 kg	3.20 m / 3.10 m [126 in / 122 in]		3.60 m / 3.49 m [142 in / 137 in]		2.98 m / 2.98 m [117 in / 117 in]
[26 psi]	[11354 lbs]	[11354 lbs]	[11354 lbs]					
2.4 bar	5800 kg	5800 kg	5800 kg					
[35 psi]	[12787 lbs]	[12787 lbs]	[12787 lbs]					
3.0 bar	6625 kg	6625 kg	6625 kg					
[44 psi]	[14606 lbs]	[14606 lbs]	[14606 lbs]					
3.6 bar	7300 kg	7300 kg	7300 kg					
[52 psi]	[16094 lbs]	[16094 lbs]	[16094 lbs]					

Alliance Agriflex 354+ VF 480/80 R50								
Load index: 171D								
Pressing depth: 0								
Air pres-sure	**Speed**			**Permissible total weight of machine**		**Track width**		
	25 km/h	40 km/h	50 km/h	Power-Gear	High PowerGear	Leeb VL narrow base frame	Leeb VL wide base frame	Leeb VN
	[16 mph]	[25 mph]	[31 mph]	22000 kg [48500 lbs]	25000 kg [55115 lbs]	2.67 – 3.57 m [105 – 141 in]	3.07 – 4.17 m [121 – 164 in]	2.32 – 3.07 m [91 – 121 in]
	Permissible load capacity			**Minimum transport width**				
				Leeb VL narrow base frame with wheels / without wheels		Leeb VL wide base frame with wheels / without wheels		Leeb VL with wheels / without wheels
0.8 bar	3350 kg	3350 kg	3350 kg	3.30 m / 3.10 m [130 in / 122 in]		3.70 m / 3.49 m [146 in / 137 in]		2.98 m / 2.98 m [117 in / 117 in]
[12 psi]	[7385 lbs]	[7385 lbs]	[7385 lbs]					
1.2 bar	4250 kg	4250 kg	4250 kg					
[17 psi]	[9370 lbs]	[9370 lbs]	[9370 lbs]					
1.8 bar	5450 kg	5450 kg	5450 kg					
[26 psi]	[12015 lbs]	[12015 lbs]	[12015 lbs]					
2.4 bar	6150 kg	6150 kg	6150 kg					
[35 psi]	[13558 lbs]	[13558 lbs]	[13558 lbs]					

Alliance Agriflex 354+ VF 480/80 R50								
Load index: 176D								
Pressing depth: 0								
Air pres-sure	Speed			Permissible total weight of machine		Track width		
	25 km/h	40 km/h	50 km/h	Power-Gear	High PowerGear	Leeb VL narrow base frame	Leeb VL wide base frame	Leeb VN
	[16 mph]	[25 mph]	[31 mph]	22000 kg [48500 lbs]	25000 kg [55115 lbs]	2.67 – 3.57 m [105 – 141 in]	3.07 – 4.17 m [121 – 164 in]	2.32 – 3.07 m [91 – 121 in]
	Permissible load capacity			Minimum transport width				
				Leeb VL narrow base frame with wheels / without wheels		Leeb VL wide base frame with wheels / without wheels		Leeb VL with wheels / without wheels
0.8 bar	3875 kg	3875 kg	3875 kg	3.30 m / 3.10 m [130 in / 122 in]		3.70 m / 3.49 m [146 in / 137 in]		2.98 m / 2.98 m [117 in / 117 in]
[12 psi]	[8543 lbs]	[8543 lbs]	[8543 lbs]					
1.2 bar	5000 kg	5000 kg	5000 kg					
[17 psi]	[11023 lbs]	[11023 lbs]	[11023 lbs]					
1.6 bar	6000 kg	6000 kg	6000 kg					
[23 psi]	[13228 lbs]	[13228 lbs]	[13228 lbs]					
2.2 bar	6900 kg	6900 kg	6900 kg					
[35 psi]	[15212 lbs]	[15212 lbs]	[15212 lbs]					

Alliance Agriflex 354+ VF 520/85 R46								
Load index: 170D								
Pressing depth: -15								
Air pres-sure	Speed			Permissible total weight of machine		Track width		
	25 km/h	40 km/h	50 km/h	Power-Gear	High PowerGear	Leeb VL narrow base frame	Leeb VL wide base frame	Leeb VN
	[16 mph]	[25 mph]	[31 mph]	22000 kg [48500 lbs]	25000 kg [55115 lbs]	2.70 – 3.60 m [106 – 142 in]	3.10 – 4.20 m [122 – 165 in]	2.35 – 3.10 m [93 – 122 in]
	Permissible load capacity			Minimum transport width				
				Leeb VL narrow base frame with wheels / without wheels		Leeb VL wide base frame with wheels / without wheels		Leeb VL with wheels / without wheels
1.0 bar	4375 kg	4375 kg	4375 kg	3.30 m / 3.10 m [130 in / 122 in]		3.70 m / 3.49 m [146 in / 137 in]		2.98 m / 2.98 m [117 in / 117 in]
[15 psi]	[9645 lbs]	[9645 lbs]	[9645 lbs]					
1.2 bar	4875 kg	4875 kg	4875 kg					
[17 psi]	[10748 lbs]	[10748 lbs]	[10748 lbs]					
1.4 bar	5450 kg	5450 kg	5450 kg					
[20 psi]	[12015 lbs]	[12015 lbs]	[12015 lbs]					
1.6 bar	6900 kg	6900 kg	6900 kg					
[23 psi]	[13228 lbs]	[13228 lbs]	[13228 lbs]					

BKT Agrimax RT 765 620/70 R46								
Load index: 162D								
Pressing depth: -65								
Air pressure	**Speed**			**Permissible total weight of machine**		**Track width**		
	25 km/h	40 km/h	50 km/h	Power-Gear	High PowerGear	Leeb VL narrow base frame	Leeb VL wide base frame	Leeb VN
	[16 mph]	[25 mph]	[31 mph]	22000 kg [48500 lbs]	25000 kg [55115 lbs]	2.80 – 3.70 m [110 – 146 in]	3.20 – 4.30 m [126 – 169 in]	2.45 – 3.20 m [96 – 126 in]
	Permissible load capacity			**Minimum transport width**				
				Leeb VL narrow base frame with wheels / without wheels		Leeb VL wide base frame with wheels / without wheels		Leeb VL with wheels / without wheels
1.0 bar	3990 kg	3800 kg	3645 kg	3.60 m / 3.10 m [142 in / 122 in]		4.00 m / 3.49 m [157 in / 137 in]		3.07 m / 2.98 m [121 in / 117 in]
[15 psi]	[8796 lbs]	[8378 lbs]	[8036 lbs]					
1.2 bar	4485 kg	4270 kg	4095 kg					
[17 psi]	[9888 lbs]	[9414 lbs]	[9028 lbs]					
1.4 bar	4975 kg	4740 kg	4545 kg					
[20 psi]	[10968 lbs]	[10450 lbs]	[10020 lbs]					
1.6 bar	5465 kg	5205 kg	4990 kg					
[23 psi]	[12048 lbs]	[11475 lbs]	[11001 lbs]					

Alliance Multistar 376 620/70 R46								
Load index: 162A8								
Pressing depth: -65								
Air pressure	**Speed**			**Permissible total weight of machine**		**Track width**		
	25 km/h	40 km/h	50 km/h	Power-Gear	High PowerGear	Leeb VL narrow base frame	Leeb VL wide base frame	Leeb VN
	[16 mph]	[25 mph]	[31 mph]	22000 kg [48500 lbs]	25000 kg [55115 lbs]	2.80 – 3.70 m [110 – 146 in]	3.20 – 4.30 m [126 – 169 in]	2.45 – 3.20 m [96 – 126 in]
	Permissible load capacity			**Minimum transport width**				
				Leeb VL narrow base frame with wheels / without wheels		Leeb VL wide base frame with wheels / without wheels		Leeb VL with wheels / without wheels
1.0 bar	3950 kg	3650 kg	3500 kg	3.60 m / 3.10 m [142 in / 122 in]		4.00 m / 3.49 m [157 in / 137 in]		3.07 m / 2.98 m [121 in / 117 in]
[15 psi]	[8708 lbs]	[8047 lbs]	[7716 lbs]					
1.2 bar	4380 kg	4050 kg	3890 kg					
[17 psi]	[9656 lbs]	[8923 lbs]	[8576 lbs]					
1.4 bar	4800 kg	4430 kg	4250 kg					
[20 psi]	[10582 lbs]	[9766 lbs]	[9370 lbs]					
1.6 bar	5180 kg	4750 kg	4590 kg					
[23 psi]	[11420 lbs]	[10472 lbs]	[10119 lbs]					

Michelin AxioBIB VF 750/70 R44 (only for Leeb VL)								
Load index: 186D								
Pressing depth: -150								
Air pres-sure	**Speed**			**Permissible total weight of machine**		**Track width**		
	25 km/h	40 km/h	50 km/h	Power-Gear	High PowerGear	Leeb VL narrow base frame	Leeb VL wide base frame	Leeb VN
	[16 mph]	[25 mph]	[31 mph]	18000 kg [39700 lbs]	24000 kg [52900 lbs]	2.97 – 3.87 m [117 – 152 in]	3.37 – 4.47 m [133 – 176 in]	-
	Permissible load capacity			**Minimum transport width**				
				Leeb VL narrow base frame with wheels / without wheels		Leeb VL wide base frame with wheels / without wheels		Leeb VL with wheels / without wheels
0.8 bar	5645 kg	5535 kg	5535 kg	3.75 m / 3.10 m [148 in / 122 in]		4.15 m / 3.49 m [163 in / 137 in]		-
[12 psi]	[12445 lbs]	[12203 lbs]	[12203 lbs]					
1.0 bar	6465 kg	6340 kg	6340 kg					
[15 psi]	[14253 lbs]	[13977 lbs]	[13977 lbs]					
1.2 bar	7285 kg	7145 kg	7145 kg					
[17 psi]	[16061 lbs]	[15752 lbs]	[15752 lbs]					
1.4 bar	8105 kg	7945 kg	7945 kg					
[20 psi]	[17868 lbs]	[17516 lbs]	[17516 lbs]					

NOTE

The track width specified apply to the lowest position of the height adjustment (or without height adjustment). In the top position of the height adjustment the specified track width become 11 cm wider.
With the Leeb VN, at track width of 2.70 m and smaller working is only possible in the lowest position of the height adjustment.

Attachment

Overview

1	Driver’s cabin	10	Steering
2	Swivelling access ladder	11	Suspension (right and left machine side)
3	Lighting	12	Exhaust gas system
4	Working headlights	13	Battery
5	Diesel engine	14	Cooler package
6	Fuel tank (right side of machine)	15	Air filter
7	Hydraulic oil tank	16	Air conditioning system
8	Maintenance access	17	Windscreen washing system
9	Wheel gear (right and left machine side)	18	Storage compartment (right and left machine side)

⚠ DANGER

Danger of serious accidents
Transport rides on the machine, especially the steps or maintenance access, are prohibited!

Hydraulics

⚠ WARNING

Accidental hydraulic movements (e.g. caused by passengers, children or air in the hydraulic system) can lead to severe accidents and injuries!

- Secure or lock the control units on the machine.
- Instruct persons to leave the slewing range of foldable machine parts.
- Switch all control units to the locked position before switching on the machine again.
- Connect the hydraulic lines only when the hydraulics are without pressure on the machine side. All connections must have been tightened before commissioning.
- When searching for leaks, never use your fingers to locate oily spots on hydraulic components.
- Vent the hydraulic system!

⚠ NOTE

- Operate the machine with mineral oils.
  Do not mix mineral oils with organic or ester oils!
  The hydraulic circulation of the machine must contain mineral-based hydraulic oil.
- Oil purity acc. to ISO 4406: 18/16/13
- Always connect all hydraulic lines! Otherwise components may get damaged because of interrelated functions.
- Ensure cleanliness and tight fit of all plug-and-socket connections!
- With all hydraulic movements slow down the control unit before the machine components reach the stop position.
- Observe the notes on hydraulics and pressure accumulator in chapter *Safety and responsibility*!

⚠ NOTE

The hydraulic cylinders must be filled again with hydraulic oil after carrying out installation work on the hydraulic system. This is done by selecting all hydraulic functions several times. Hydraulic cylinders must extend and retract without jerking.

- Danger zones must be blocked off during commissioning.
- When performing installation work, raised machine parts must be lowered completely, moved to a safe position or secured at the particular height by suitable means.

Lighting

NOTE

➢ Flashing indicator light to indicate a direction change during road travel.

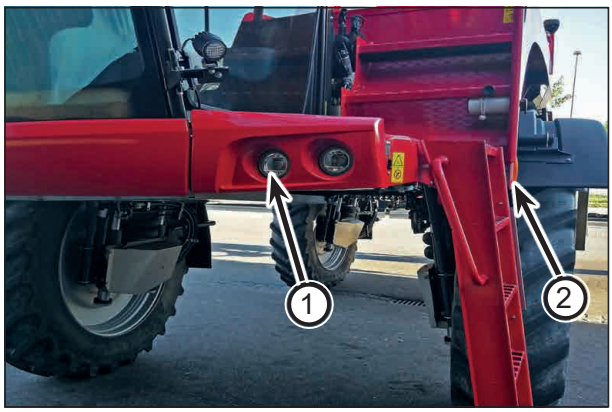

Blinkers/hazard light system (each on the right and left side)

1 Blinkers/hazard light system

2 Outside blinker

NOTE

Driving light can only be switched on with the ignition activated.

Front headlamps for driving light and high beam (each on the right and left side)

3 High beam

4 Parking light / daytime running light / dimmed headlight

5 Trackfinder (each on the right and left side) (optional)

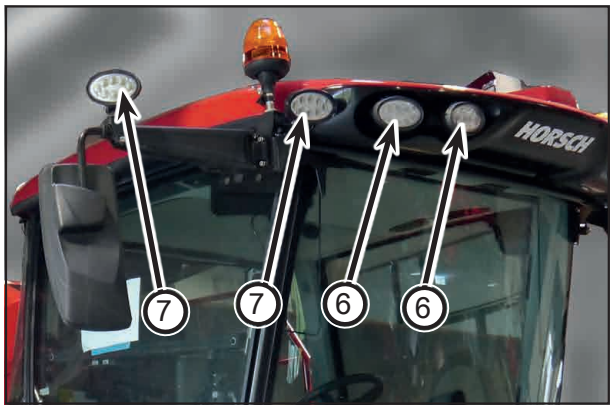

Working headlights (each on the right and left side)

6 Working headlights

7 Working headlights (optional)

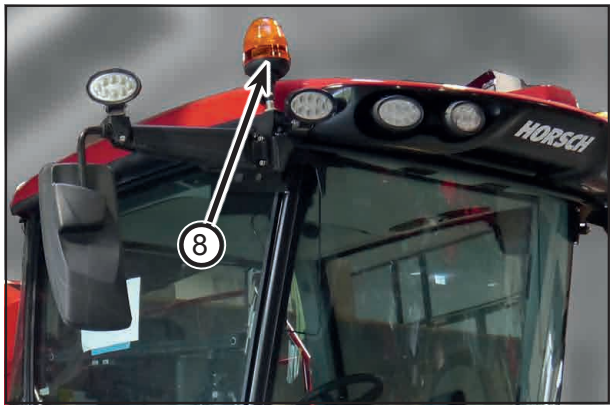

8 Rotating beacon (each on the right and left side) (optional)

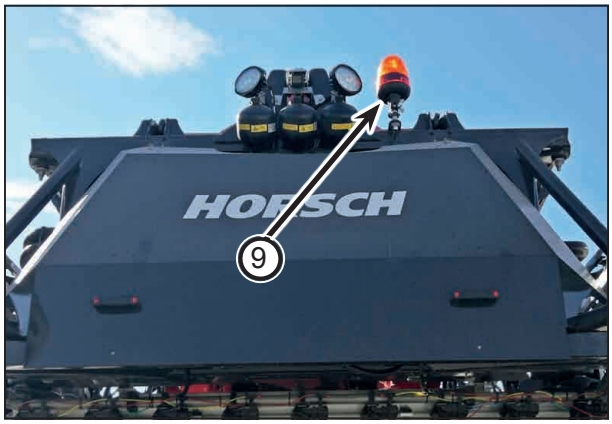

9 Rotation beacon folding boom middle section (optional)

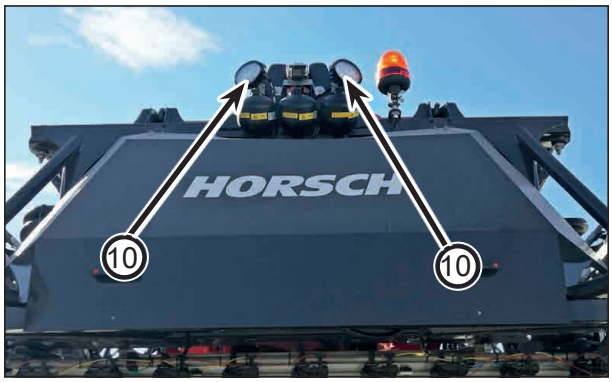

10 Reversing light on pendulum frame (optional)

11 Folding boom headland lighting (each on the right and left side) (optional)

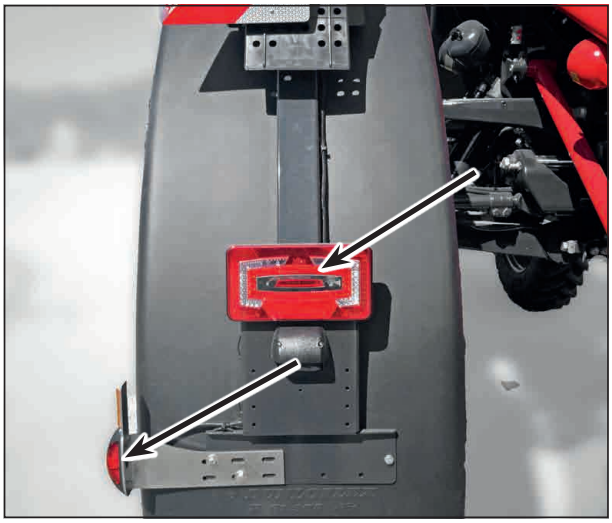

Rear light, reversing light, brake light and blinker / hazard light system (each on the right and left side) (The design may vary according to the country.)

⚠ WARNING

Traffic accidents caused by defective lighting.

- Check the lighting before setting off.
- Check warning boards and lighting equipment for cleanliness.

Instruction stickers

- Clean soiled stickers.
- Damaged or illegible stickers must be replaced immediately.
- Apply the specified stickers to spare parts.

Retighten the wheel nuts / wheel bolts after 50 km or 10 hours. Retighten every day - see maintenance overview.

00380359

Tighten with torque of 510 Nm [375 ft lb]

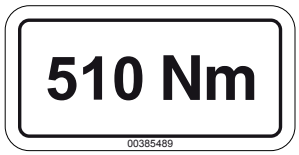

00385489

Position of the lifting device must be dismantled after delivery.

60011388

Lashing points
Hook fastening gear (lashing belts, chains, etc.) here.

Loading work only by operators trained by HORSCH!

60010418

Components Chassis

Engine

The engine is located behind the cabin.

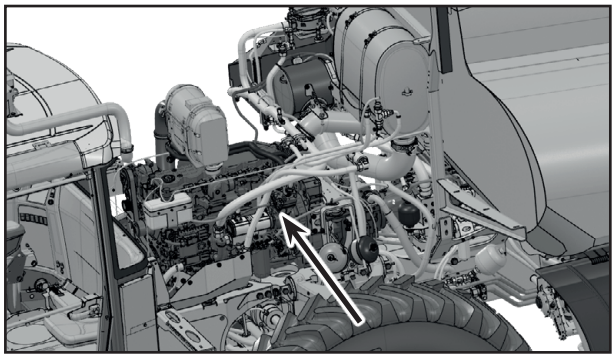

⚠ WARNING

The engine and protective covers may only be opened when the engine has been shut down.

⚠ CAUTION

A mixture of dust, oil and plant residues in the engine compartment represents a potential fire hazard. Increased fire hazard!

- Always keep engine and engine compartment clean.
- If necessary clean out dirt and oil deposits.

Engine oil

A minimum oil level in the oil sump is mandatory to make sure that the engine is also lubricated in slanted position.
If the oil level is too low, the engine should not be started.
The oil level should always be between the min. and max. marks on the dipstick.
The oil level can be read from the dipstick (left side of the engine).

⚠ NOTE

Maintaining the required oil level is mandatory for the engine!

- Check the engine oil level only with the machine parked horizontally.
- If the oil level is below the minimum the engine must not be started.
- Fill up oil to the maximum mark on the oil dipstick.
- Thoroughly clean the area around the oil dipstick before pulling it out.
- After the oil level check reinsert the dipstick.

- If the oil level is too low, top up engine oil through the filler opening.
- In case of too low oil pressure an audible warning signal will sound. Shut down the engine and perform troubleshooting.

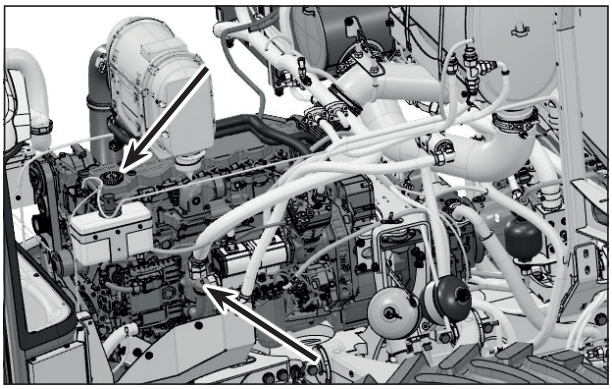

Filler opening for engine oil

Engine oil and filter change

⚠ WARNING

Allow the engine to cool down before and oil change!

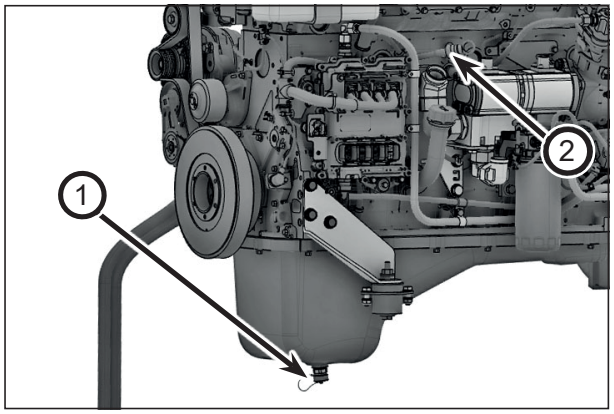

1 Drain plug
2 Oil dipstick

- Unscrew the drain plug on the bottom of the oil pan. Attach the supplied drain hose for the oil change. Attaching the hose will open the safety valve in the oil pan connection. Drain the oil.
- Screw the drain plug back into place.
- Refill new oil according to the maintenance table and check it with the dipstick. Follow the *Maintenance overview* section.

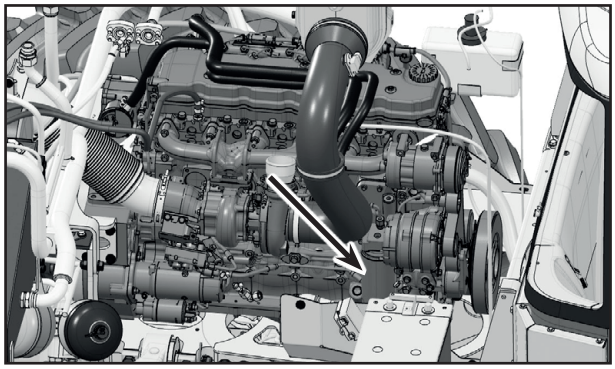

Engine oil filter

- Remove the oil filter.
- Wet the rubber seal of the new filter with clean oil.
- Tighten the filter quickly until it is just seated. Now turn the filter by another half turn.

⚠ NOTE

Change the engine oil and the engine filter after each 600 hours or annually.

Crankcase filter change

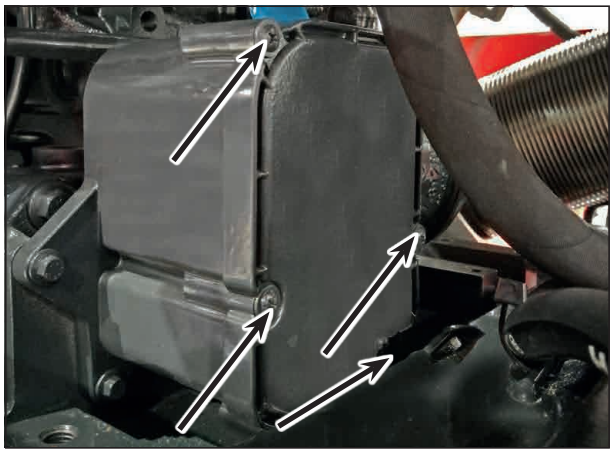

- Remove the screws on the housing.
- Remove the filter and introduce a new filter.
- Close the housing again with the screws.

Engine coolant

From the factory the cooling system is filled with a special coolant. This coolant protects against corrosion and offers anti-freeze protection down to -30°C.

⚠ CAUTION

Risk of scalding when opening the cap while the engine is hot. Shut down the engine and wait until the engine has cooled down. Totally remove the filler cap!

⚠ NOTE

The cooling system must always be filled with engine coolant, irrespective of the time of year! Refer to the HORSCH maintenance log supplied for checks and maintenance!
It is mandatory to observe and comply with the specification of the engine manufacturer!

- Check the engine coolant by removing the filler cap. The coolant must reach the upper edge.
- If the filling level is too low, a warning message appears at the terminal. The filling level can also be read through the sight glass.
- In case of a too high coolant temperature an audible warning signal will sound. Shut down the engine and let it cool down. Check for the cause of overheating.
- Check the engine coolant level every day.

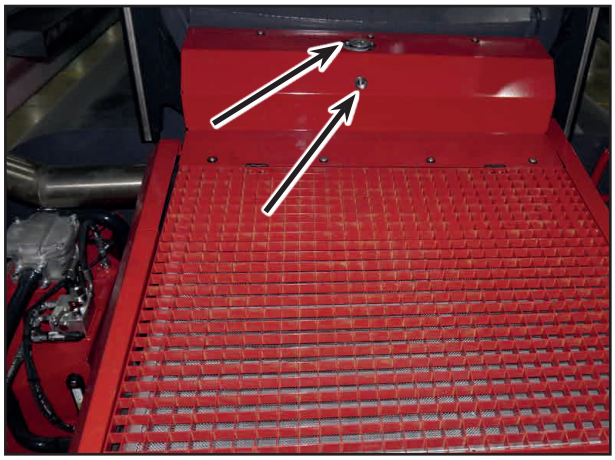

Sealing cap and sight glass for cooling liquid

Clean cooling system

Always keep air intakes and cooling nets clean. Shut the engine down for cleaning. If necessary clean with compressed air or a water jet.

⚠ NOTE

- The cooling fins of the cooler package must always be kept clean!
- Do not use high pressure cleaner for cleaning!
- Do not clean crosswise toward the fins!

Compressed air connection

There is a compressed air connection behind the cabin under the cover flap. A compressed air hose can be connected to it to blow out machine parts, e.g. air filters or radiators with compressed air.

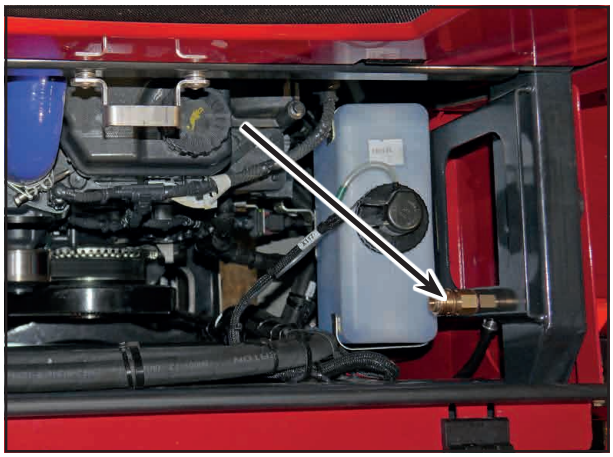

Compressed air connection

⚠ CAUTION

Open the cover only when the engine is stopped! Make sure that the ignition key has been pulled out and that no other persons are in the cabin.

Ribbed V-belt

⚠ CAUTION

Check / tension / change ribbed V-belts only with the engine shut down. Make sure that the ignition key has been pulled out and that no other persons are in the cabin.

The ribbed V-belt drives the following components:

- Fan / water pump
- Generator
- A/C compressor

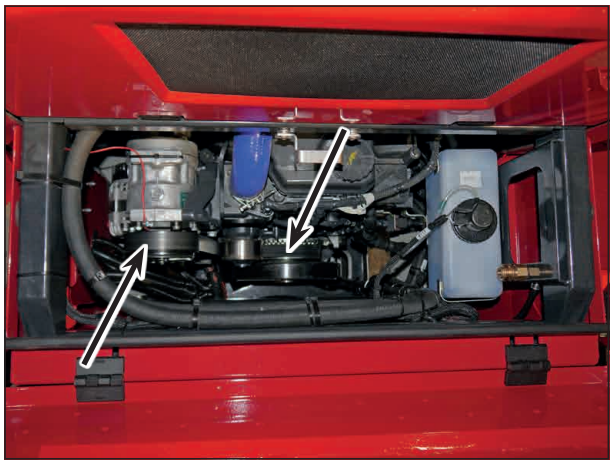

Ribbed V-belt

NOTE

Follow also the notes in the *Undercarriage maintenance overview* section.

Fuel tank

The fuel tank is located on the right-hand side of the machine.

Fuel tank (figure shows the variant with stage V engine and tank for carbonyl diamide solution)

1 Fuel tank
2 Filling opening with lid
3 Carbonyl diamide tank (only with Leeb 5 / 6 / 8.300 VL and Leeb 5 / 6.300 VN)

Fill up fuel / carbonyl diamide solution

only with Leeb 5 / 6 / 8.300 VL and Leeb 5 / 6.300 VN

CAUTION

Danger of explosion when handling fuels! Shut down the engine! During refuelling, open fires must be avoided and smoking is strictly prohibited!

NOTE

Use only stipulated fuels. They are listed in the *Maintenance overview* section.
Quality and cleanliness of fuel and carbonyl diamide solution are of fundamental importance for continuous good performance and a long service life of the engine.
Always refuel every day after the end of work to prevent the formation of moisture and freezing of the fuel system.

- ➢ Shut the engine down before starting to refuel. Lower the suspension to the lowest level if necessary.
  - The filler neck is closed with the tank filler cap.
  - The tank is ventilated through a hole in the tank filler cap.
- ➢ Before removing the tank cap clean the area around it from crop residues and dust/dirt.
- ➢ Caution when handling easily inflammable fuels and carbonyl diamide solution. During the refuelling process do not smoke, avoid naked flames and ignition sources!
  - Avoid fire by keeping the machine free of dirt and grease residues.
- ➢ Only refuel outdoors. Always wipe off any spilled fuel / carbonyl diamide solution.
- ➢ Finish the fuelling process after the pump nozzle has shut off.
- ➢ Refuel according to the season of the year.

⚠ NOTE

Diesel fuel or carbonyl diamide solution must not come into contact with the skin, eyes or clothing and must not be inhaled.

- ➢ Move any affected person to the fresh air after inhalation. Contact medical assistance in case of doubt.
- ➢ Wash with plenty of water and soap in case of skin contact.
- ➢ In case of eye contact, wash immediately and thoroughly with water and contact a physician. Remove contact lenses if applicable.
- ➢ If swallowed, rinse out the mouth immediately with lots of clear water and drink plenty of water. Do not induce vomiting.
- ➢ Change soiled clothes immediately.
- ➢ In case of allergic reactions consult a physician immediately.
- ➢ Keep fuel or carbonyl diamide solution away from children.

⚠ NOTE

When the ignition is switched on, the fuel level and carbonyl diamide solution level can be read on the engine display.

Fuel filter

The engine has a fuel prefilter and a fuel filter.

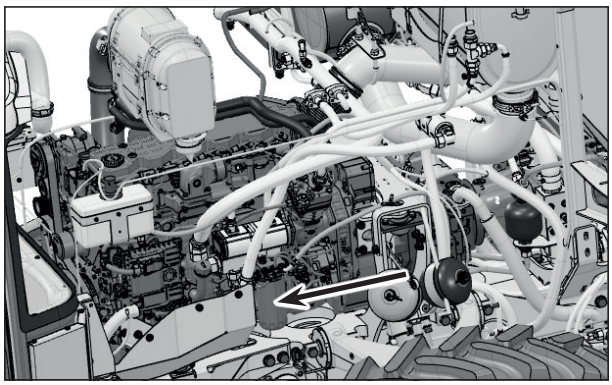

Fuel master filter

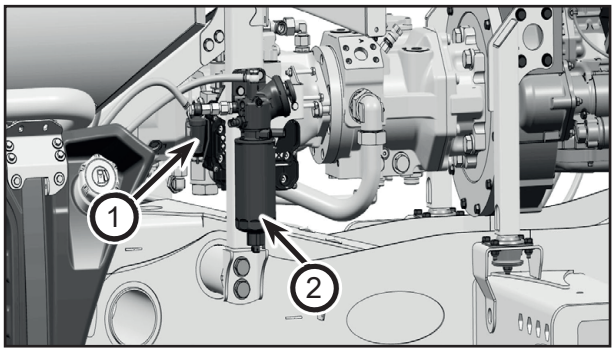

1 Fuel prefilter sight glass

2 Fuel prefilter

Exhaust gas system Leeb 5.280/ 6.280 / 8.280 VL, Leeb 5.280 / 6.280 VN

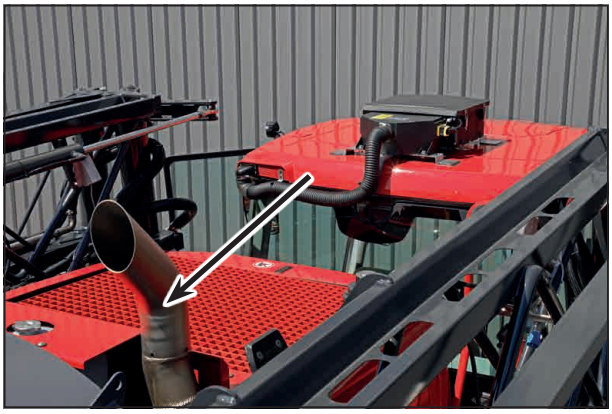

➢ Emissions standard stage 3a

No exhaust gas treatment is provided.

⚠ WARNING

Risk of burns in the area of the exhaust system. Keep a safe distance to hot surfaces!

Exhaust gas system Leeb 5.300/ 6.300 / 8.300 VL, Leeb 5.300 / 6.300 VN

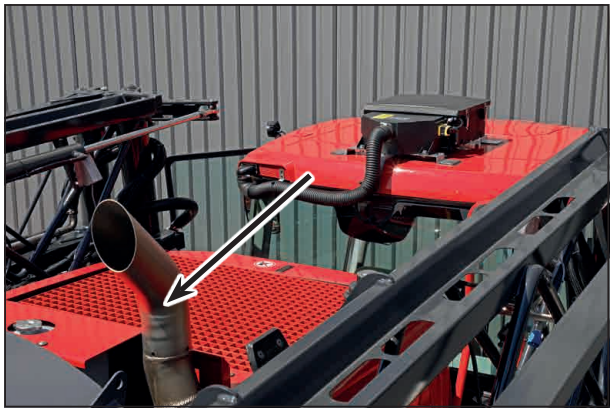

➢ Emissions standard stage 5

Emission treatment consists of:

- Oxidation catalyst
- Particle filter with regeneration system
- Selective catalytic reduction with carbonyl diamide solution

Carbonyl diamide filter change (only with Leeb 5 / 6 / 8.300 VL and Leeb 5 / 6.300 VN)

➢ Unscrew the lid of the carbonyl diamide filter.

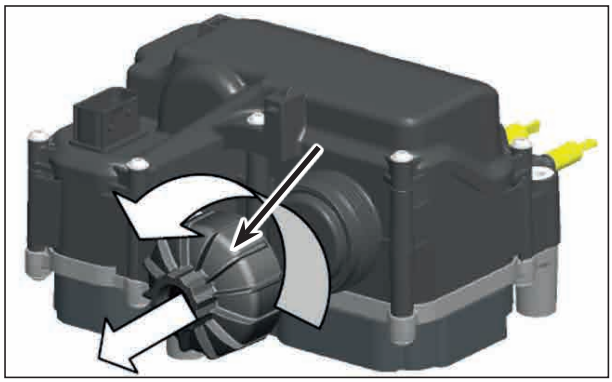

Figure: FPT©

➢ Remove the plunger of the filter.

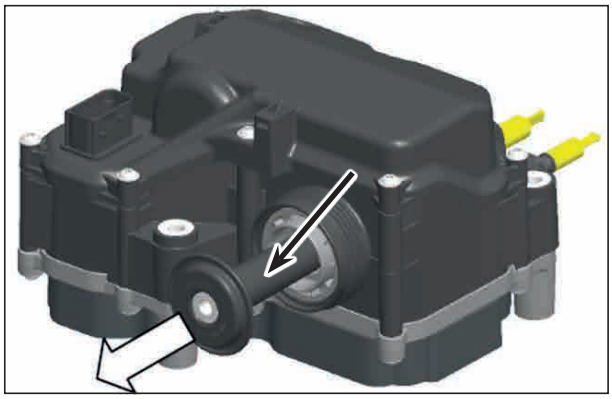

Figure: FPT©

➢ Visually check the colour of the main filter.

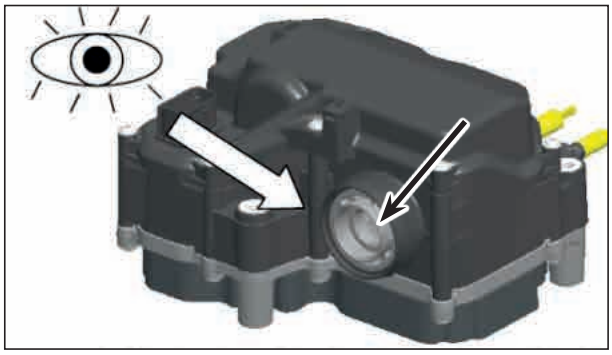

Figure: FPT©

➢ Introduce the tool supplied into the filter. Use the correct side of the tool according to the colour (black or grey).

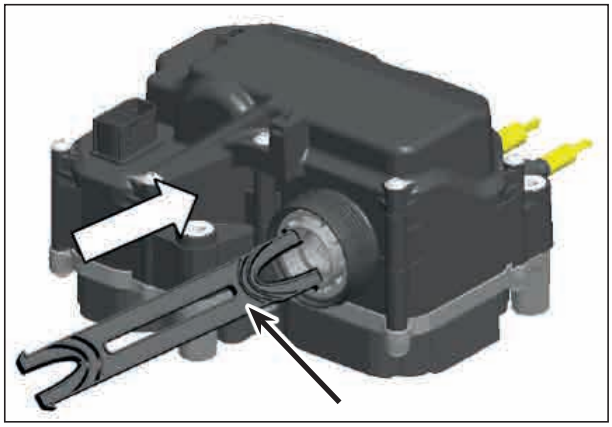

Figure: FPT©

➢ Pull out the filter with the tool.

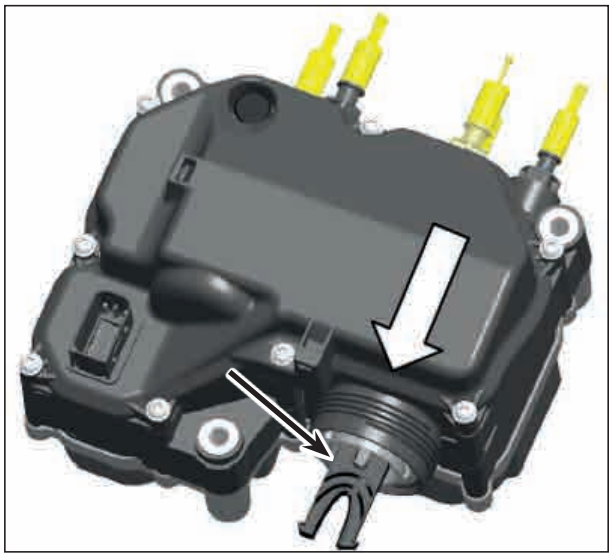

Figure: FPT©

➢ Introduce the new filter.

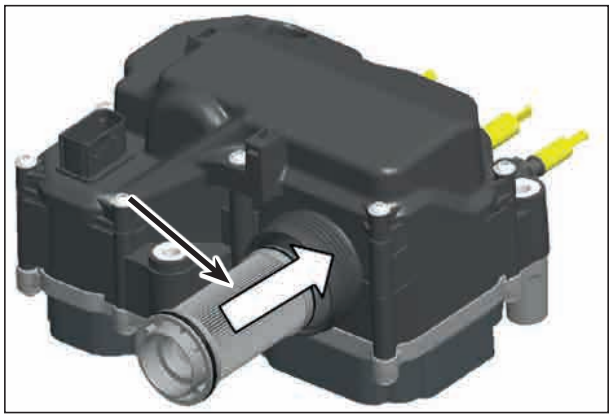

Figure: FPT©

➢ Reattach the plunger of the filter.

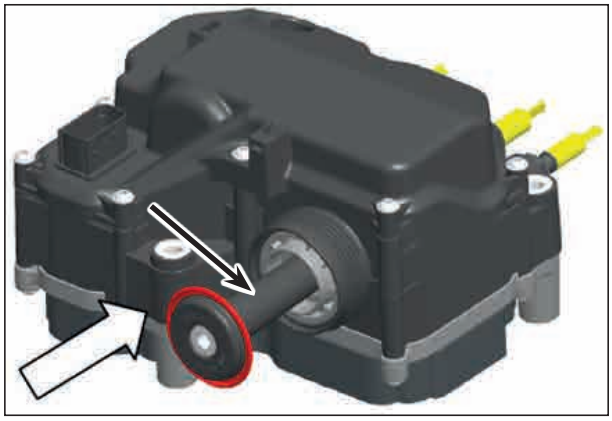

Figure: FPT©

➢ Screw the lid of the carbonyl diamide filter back on. Tightening torque: 20 ± 5 Nm [14 ft lb ± 3.5]

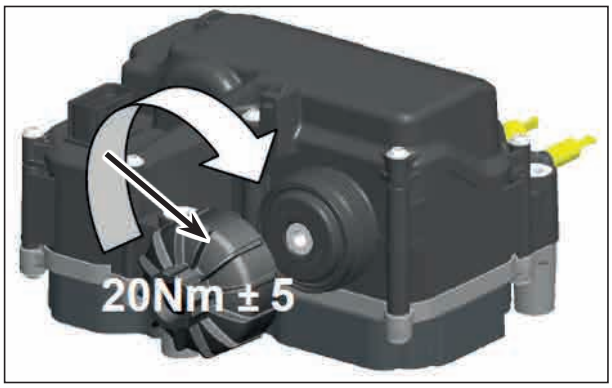

Figure: FPT©

Diesel filter change

⚠ NOTE

The diesel filter must be replaced every 600 operating hours or annually.
Vent the system after changing the filter!

Ventilation

➢ Fill the fuel tank with fuel.

➢ Open the vent screw.

➢ Pump with a hand pump until fuel escapes from the vent screw without forming bubbles.

➢ Close the vent screw max. 8 Nm.

➢ Continue operating the hand pump until a noticeable resistance is felt.

➢ Now start the engine.

⚠ NOTE

Never hold the ignition key longer than 10 seconds in the starting position. Wait 30 seconds before attempting the next start.

- Increase the speed to dispel the remaining air from the fuel system.
- Repeat the previous steps if air remains and the engine stalls.
- Carry out the process until the engine starts without problems.

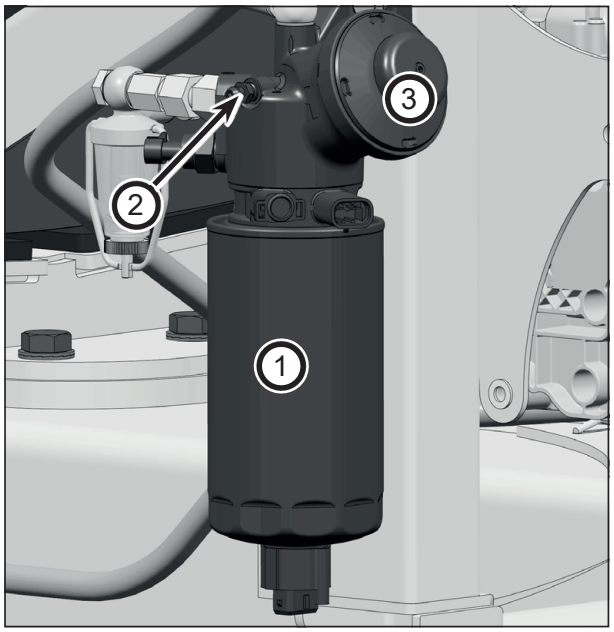

1 Diesel filters
2 Venting screw
3 Hand pump

Hydraulic oil tank

The tank is located on the right-hand side of the machine.

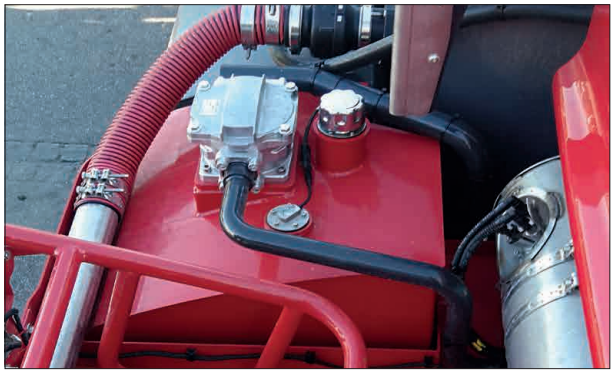

Oil level inspection

- Fold in the spraying boom.
- Set the hydraulic height adjustment to street level. (optional)
- Shut down the engine. Oil must be visible in the sight glass. (depending on variant)
- The sight glass is located on the hydraulic oil tank (depending on variant).
- If the oil level is too low, a warning message appears at the terminal.

Sight glass hydraulic oil tank

Oil drain plug

Filling opening

NOTE

Oil level control:

- During operation the oil level must be between min and max.
- Level for service: The oil level must be here when refilling. Do not fill up further than to the marked area. The machine must be in the maintenance position.

Maintenance position: Ladder folded down, steering centred, ClearanceControl at lowest position, suspension centred, track width retracted, folding boom folded in and put down.

Oil change

NOTE

Do not mix different oils. Use only the prescribed specification!
Before changing the oil type, you should consult the Customer Service.

We advise you not to use bio-hydraulic oils. Should the use of bio-hydraulic oils be necessary in isolated cases, you should strictly consult the Customer Service.

Refer to the *Maintenance* chapter and the HORSCH maintenance log for the first oil change and the further intervals.

- Place a suitable collecting vessel under the drain plug and on the drain hose.
- Open the drain plug and screw in the drain hose.
- Drain oil into a suitable collecting vessel and dispose of in accordance with regulations.
- Close the drain plug.
- Fill in new oil according to the maintenance table. Follow the *Maintenance overview* section in this regard.
- Check the oil level (oil must be visible in the sight glass) (depending on variant).
- Start the engine and run it for two minutes at idle speed.
- Set the hydraulic height adjustment to street mode. (optional)
- Check oil level once more, top up if necessary.

NOTE

You may hear pump noises temporarily. If these do not disappear after a short while, shut down the engine and consult our After Sales Service!

NOTE

Change the oil of the hydraulic tank every 1200 h or annually. Refer also to the *Undercarriage maintenance overview* section.

Change hydraulic oil filter

NOTE

Ensure strict cleanliness when changing the filter!

Replace filter element

- Replace the filter with every hydraulic oil change.
- Clean the area around the filter.

1. Unscrew four screws on filter housing.
2. Take out the filter.
3. Replace the seal ring.
4. Reinsert the new filter.
5. Assemble the housing cover.
6. Check the filter for leak tightness with the engine running.

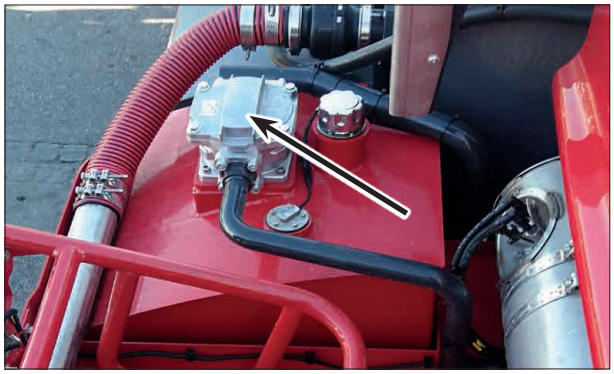

Hydraulic oil filter

NOTE

You may hear pump noises temporarily. If these do not disappear after a short while, shut down the engine and consult our After Sales Service!

Clean hydraulic oil cooler

Always keep the hydraulic oil cooler clean. The engine must be shut down for cleaning the fins.

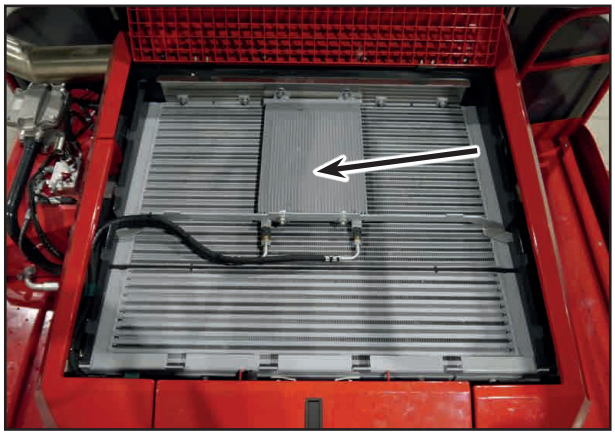

NOTE

- Do not use high pressure cleaner for cleaning!
- Do not clean crosswise toward the fins!

Steering

The machine is equipped with various steering combinations.

- Manual front axle steering
- All-wheel steering
- Slope mode

The vehicle has been designed with rear axle steering. The steering angle of the rear wheels depends on the travel speed.

- With travel speeds of less than 10 km/h the steering angle is identical for front and rear axle.
- With travel speeds between 10 and 20 km/h [6.2 and 12.4 mph] the steering angle of the rear axle is increasingly reduced.
- From 20 km/h [12.4 mph] up the rear axle steering is disabled. The axle remains in middle position.

The steering mode can be selected using the buttons on the multi-function control panel or the terminal.

Brake system

⚠ DANGER

Uncontrolled rolling of the machine may cause severe injuries by crushing or rolling over.

- ➢ Park the machine only on level ground with sufficient load bearing capacity.
- ➢ Secure the machine with wheel chocks against rolling before releasing the brake.

⚠ WARNING

Danger of crushing, cutting, being pulled in, being caught and impact caused by incorrectly functioning brake system!
Perform a function test of the brake system before each travel!

⚠ NOTE

Adjustments and repair work on the brake system must only be carried out in a professional workshop or by an operator, who has been specially trained by HORSCH.

The machine has a wet multi-disc brake on each wheel gear.
The brake is actuated via the foot pedal in the cabin.
The hydraulic parking brake in the wheel gear is actuated via a toggle switch in the cabin.

- ➢ After a short travel distance perform a brake test at low speed.
- ➢ Check for chafing points on the brake hoses!

Maintenance

- ➢ Check all flexible brake or hydraulic hoses for wear.
- ➢ Check all brake lines for damage.
- ➢ Check all threaded joints for leaks.
- ➢ Replace worn or damaged parts.

⚠ WARNING

Danger of traffic accidents caused by brake failure!
During commissioning or after long periods of rest:

- ➢ Start the engine to fill the pressure accumulator for emergency braking before starting to drive

Mechanical release mechanism of parking brake

DANGER

Danger of severe injuries caused by unprotected rolling of the machine when the parking brake is released!
Always use the wheel chocks provided when the machine is stopped!

NOTE

The active parking brake is deactivated. During maintenance work secure the machine with wheel chocks against accidental rolling away!

- In the event of faults of the engine or hydraulic pump, the vehicle may not build up the oil pressure necessary to release the parking brake. In this case the parking brake can be released manually.
- Press in the tappet (1) on the hydraulic pump.
- Operate the hand pump (2) until a noticeably resistance can be felt. The parking brake is now released.
- Due to a possible leakage later pumping may be necessary.
- The release device is deactivated per hydraulic oil pressure as soon as the engine is running again.

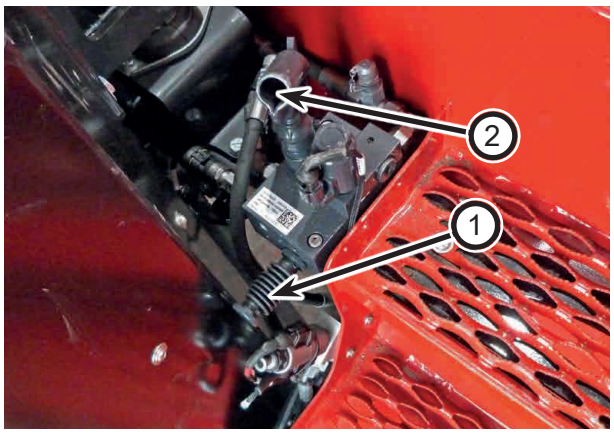

1 Tappet
2 Hand pump

The actuating lever for the hand pump is located in the storage box in the bin on the left side in the direction of travel.

Mechanical release device actuating lever

DANGER

The machine may start rolling when operating the mechanical release device! Secure the machine with wheel chocks!

Axles

NOTE

All maintenance and repair works must solely be carried out by expert personnel. Safety regulations must be strictly complied with!

The oil in the wheel gears must be changed at regular intervals. Check for leaks on the gears. Check the hoses for visible damages.

Remove all dirt from the steering knuckles once every day. For this purpose turn steering once completely to the left and the right.

Wheel drive

The wheel motor transmits its power to the wheel via the wheel gear.

Two gear variants – PowerGear (GFT 8130) and HighPowerGear (GFT 8144) – are available.

PowerGear (GFT 8130)

- Small variant
- 10 wheel nuts

HighPowerGear (GFT 8144)

- Large variant
- 12 wheel nuts

The correct amount of oil in the gears must be ensured depending on the variant!

Oil change

NOTE

Change the oil of the wheel gears after the first 100 hours and then after every 600 hours. Refer also to the *Undercarriage maintenance overview* section.

Refer to the *Maintenance* chapter and the HORSCH maintenance log for the first oil change and the further intervals.

In between, check the oil in the wheel hub gears regularly.

NOTE

Perform the oil change only with the gearbox at operating temperature!

- Park the machine on level ground.
- The wheel must be positioned so that the oil drain plug is at the lowest point. Then open the oil drain plug.
- Catch the oil in a suitable tank and close the drain plug.

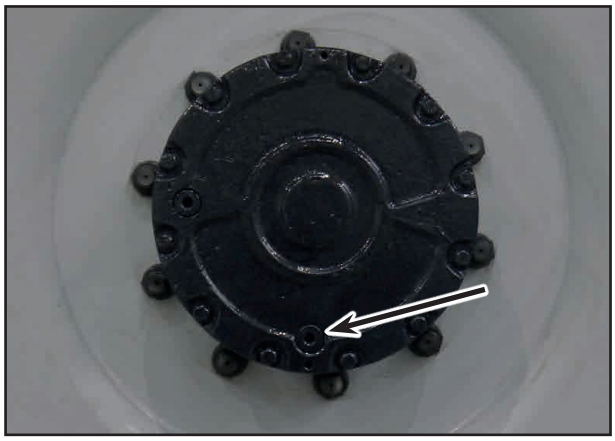

Oil drain plug

- Turn the wheel until the filler plug is below the centre of the wheel gearbox (note the value in cm).
- Gear PowerGear (GFT 8130):
  approx. 3.5 cm [1.38 in]
- Gear HighPowerGear (GFT 8144):
  approx. 3.5 cm [1.38 in]
- Open the filler plug and fill in new oil up to the lower level.

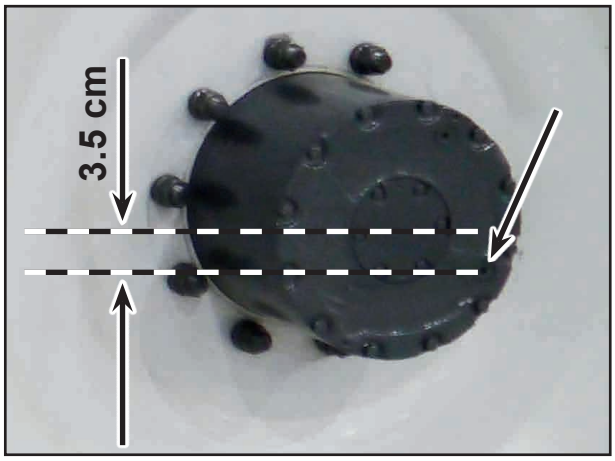

Filler plug

- Close filler plug.
- Heat the gearbox to approx. 50 °C [122 °F] by driving.
- Then check the oil level and top up if necessary.

NOTE

Only use the specified gear oil with the correct viscosity. Follow the specifications in the *Undercarriage maintenance overview* section. Oils not approved may cause greater wear, poorer braking action and even failure of the wheel hub bears.
Filling capacity per wheel hub gearbox:

- Gear PowerGear (GFT 8130):
  approx. 4 x 1.9 litre [4 x 64 fl oz]
- Gear HighPowerGear (GFT 8144):
  approx. 4 x 2.6 litres [4 x 88 fl oz]

Wheels and tyres

- Check the tyres every day for damage and air pressure, because the lifetime of tyres depends on the air pressure.
- Have cuts or breaks in the tyres repaired as quickly as possible or change the tyres.
- Do not expose tyres to oil, grease, fuel, chemicals as well as prolonged direct exposure to sunlight.
- Drive carefully! Avoid driving over sharp stones or edges.
- The prescribed tyres and rims must be used.
- The difference in tyre pressure between the tyres on one axle must not exceed 0.1 bar [1.45 psi].
- During fast driving or hot ambient temperature the air pressure may rise by up to 1 bar [14.5 psi]. Do not reduce the air pressure, because it may then drop too low when cooling down!
- Repair work on tyres must only be carried out by experts and by using appropriate assembly tools.
- Assembly work requires appropriate knowledge and proper tools.

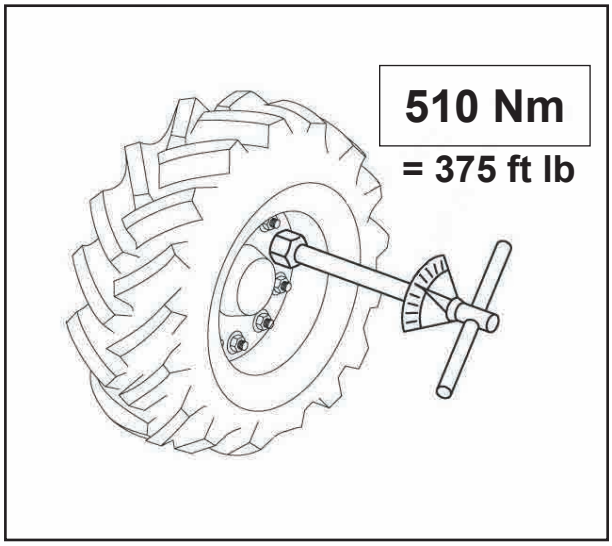

NOTE

Retighten the wheel fastening screws after the first hour and then after 20 operating hours. Subsequent regular checks!

Tight fit of wheel nuts:

Front	510+ 50 Nm [375 + 37 ft lb]
Rear	510+ 50 Nm [375 + 37 ft lb]

Air pressure of tyres

The required air pressure in the tyres depends on:

- Tyre size
- Load bearing capacity of the tyres
- Travel speed

The performance of tyres is reduced by:

- Overloading
- air pressure in tyres too low
- air pressure in tyres too high

Wheel change

WARNING

Danger to life caused by crushing and impact in case of unprofessional or incorrect operation. Instruct persons to leave the working and danger zone when working on the machine!

⚠ WARNING

- Use the lifting device supplied to raise the machine!

⚠ NOTE

- Perform a wheel change only with profound expert knowledge and by using proper assembly tools.
- Preferable use auxiliary devices such as a wheel change cart to change wheels.
- When changing wheels without special devices, perform this task with a least 2 persons who are able to handle the wheel securely.
- Work only on level ground with sufficient load bearing capacity.
- Observe the accident prevention instructions when changing the wheels.
- When assembling new tyres always use new tubeless valves or hoses.
- Remove any corrosion found on the wheel contact area of the rims before assembling a new / different tyre.
- When travelling, traces of corrosion can cause damage to the rims.
- Always screw valve caps with integrated seal on the valves.
- Tighten the wheel screws with 510 Nm [375 ft lb].

Execution

1. Park the machine on a level and paved area.
2. Apply the parking brake.
3. Place the jack on the side of the wheel to be changed at the lifting point of the lifting device. Follow the section *Single wheel lifting device* to this end. When using a hydraulic jack without safety lock, use a tripod trestle or similar support device in addition to secure the load against lowering.
4. Loosen the wheel nuts by half a turn.
5. Lift the axle with the jack until the wheel is clear.
6. Adjust the tripod trestle to the correct length and put it under the axle.
7. Loosen the wheel nuts and remove the wheel.

⚠ WARNING

- Never park the machine without securing it when the wheel(s) is/are dismantled!

8. Attach the new wheel and fasten it with the wheel nuts. Tighten all wheel nuts crosswise:

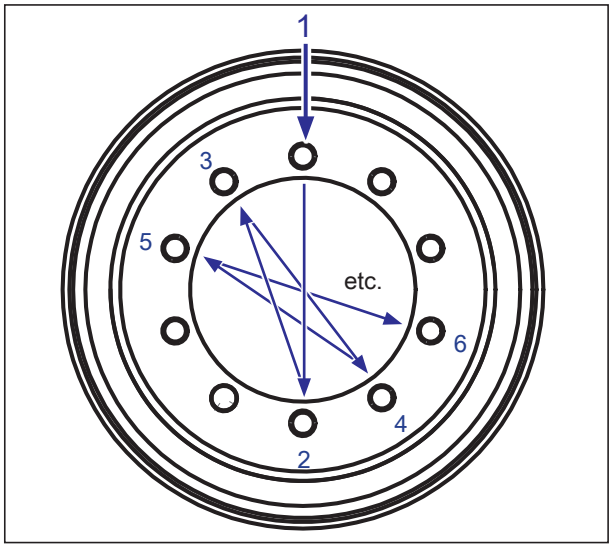

9. Remove the tripod trestle and lower the machine.
10. Tighten the wheel nuts with the torque wrench.

⚠ NOTE

- Retighten the wheel nuts after 10 km [6.2 mi].

Single wheel lifting device

A jack can be positioned on the lifting device, e.g. for a tyre change. This allows changing each tyre individually in spite of single wheel suspension.

The lifting device can be mounted with each variant of the planetary gear.

⚠ WARNING

- Switch off the engine!
- Engage the parking brake and secure the machine with wheel chocks against rolling away.
- Chemical tank and fresh water tank must be empty when lifting.
- Lift only one steering knuckle at a time.
- Check the lifting device for cracks before each use.
- The suspension must be lowered completely.
- The jack must have a lifting capacity of at least 5 tons.

⚠ NOTE

Lower the machine completely.
Leeb VL: Disengage the linkage for the level suspension. This must be done separately for each axle and each wheel. All 4 level valves must be opened at the same time.
Leeb VN: Lower the suspension via the terminal.
After using the lifting device, reset the suspension to its original state. Refer also to the section *Suspension*.

Delivery

The lifting device is mounted to the hydraulic brackets of the travel drive when delivered. This is only the delivery position!

Lifting device delivery position

- Unscrew the lifting device, together with the mounting brackets, before working with the machine and store it at a safe location.

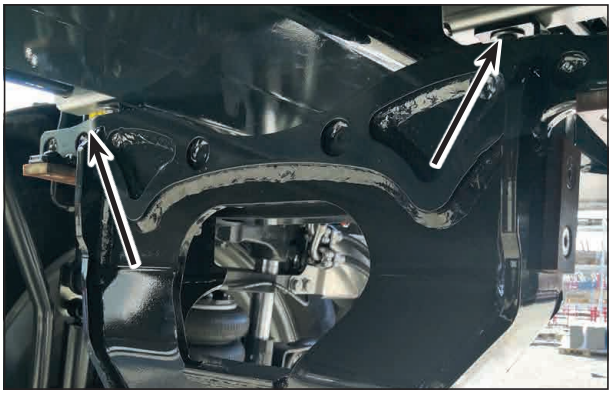

Lifting device with mounting bracket

Installation

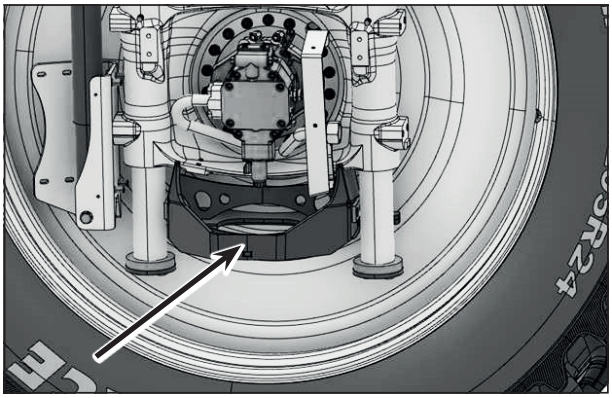

Lifting device installed

- Remove the end plates on the guide columns of the wheel suspensions.
- Push in the lifting device from below and hook in to the rear of the suspension sled.
- Place the jack under the lifting device. The device is fixed and the wheel can be lifted.

Axle lifting device (optional)

A lifting device is available for mechanical track and height adjustment allow to lift the machine by individual axles.

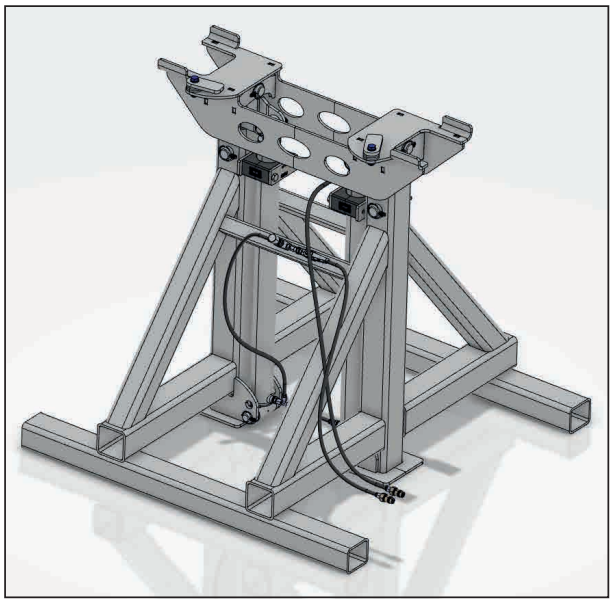

Axle lifting device

Track width

Leeb 5.280 / 6.280 / 8.280 / 5.300 / 6.300 / 8.300 VL:

- Depending on the equipment and variant of the vehicle, the track width can be set between 2.60 to 4.47 m [102 to 176 in].

Leeb 5.280 / 6.280 / 5.300 / 6.300 VN:

- Depending on the equipment and variant of the vehicle, the track width can beset between 2.25 to 3.20 m [89 to 126 in].

2 equipment variants, mechanical or hydraulic, are available to adjust the track width.

NOTE

Adjust the height before setting the track width. The track differs between top or bottom when performing the height adjustment.

Mechanical track width adjustment

The track width is set via sliding axles.

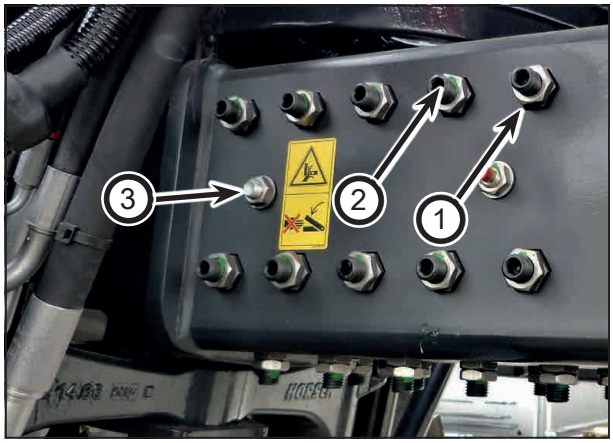

1 Hexagon nut
2 Grub screw
3 No adjustment required

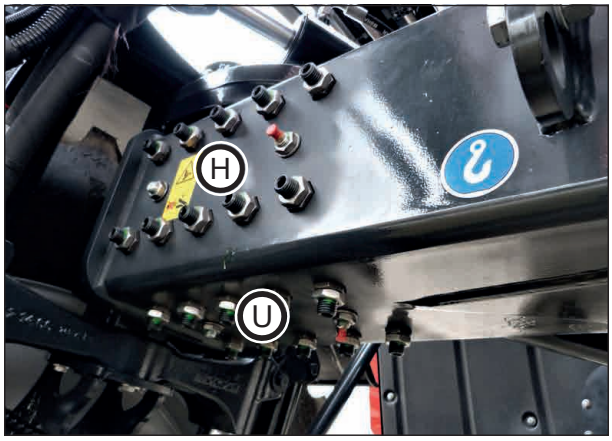

U Lower side of sliding axle
H Rear side of sliding axle

⚠ WARNING

Increased risk of accident when adjusting the track width!

- Pay attention to the notes from the safety chapter!
- Always adjust the track width only one axle at a time; never raise the complete machine.
- To lift the machine, the lifting equipment supplied must be used , see chapter *Axle lifting device*.
- Perform only on a level and firm surface.
- Secure the vehicle against rolling.
- Lower the vehicle with hydraulic height adjustment, see chapter *Height adjustment*.
- Drain the spraying mixture container and the fresh water tank.

Releasing the sliding axle

- Park the machine on level and paved ground and lift one axle with the lifting equipment.
- Always loosen the mounting screws of the sliding axle from the **inside to the outside**.

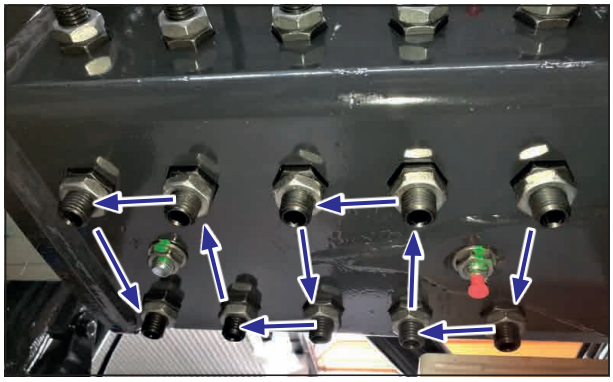

Loosen from the inside to the outside (the figure shows the left rear axle, lower side)

- Always start with the hexagon nuts of the rear side (H). Open the grub screws by approx. 60°. Loosen the grub screws further if necessary.
- Then use the same procedure on the bottom side (U) of the sliding axle.
- Adjust the sliding axle to the desired track width.

Clamping of the sliding axle

- Park the machine on a level and paved surface and lift it with the lifting equipment to allow the axle to be clamped with zero clearance.
- Adjust the sliding axle until the desired track width is reached.
- Always tighten the mounting screws of the sliding axle from the **outside to the inside**.

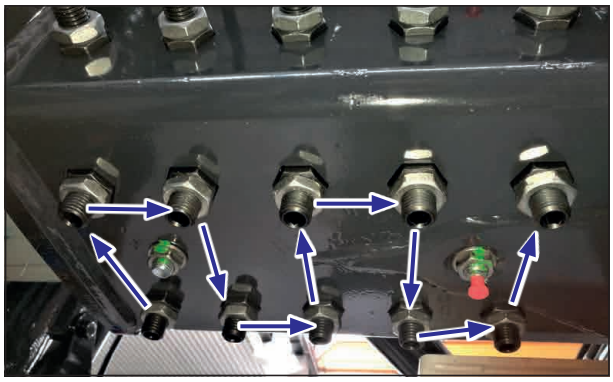

Clamp from the outside to the inside (the figure shows the left rear axle, lower side)

- Pretension the grub screws of the bottom side from the outside to the inside (U) with 40 Nm [30 ft lb].
- Pretension the grub screws of the rear side from the outside to the inside (H) with 40 Nm [30 ft lb].
- Tighten the grub screws of the rear side (H) from the outside to the inside with a final tightening torque of 80 Nm [60 ft lb].
- Tighten the grub screws of the bottom side (U) from the outside to the inside with a final tightening torque of 80 Nm [60 ft lb].
- Tighten the hexagon nuts with 180 Nm [133 ft lb] from the outside to the inside.
- Lower the vehicle and continue with the second axle as described.

NOTE

Pay attention when performing the adjustment that the sliding tube setting is identical on both sides and the axle is therefore aligned centred. If necessary, perform the settings on the terminal for machines with automatic steering. Lift the machine for clamping with zero clearance. The grub screws and hexagon nuts of the sliding axle must be retightened after 100 h and then every 600 h due to the settling of the sliding and connecting elements.

- Mechanical: Pre-clamping 40 Nm [30 ft lb]; after-clamping 80 Nm [60 ft lb]
- Hydraulic: Pre-clamping 40 Nm [30 ft lb]; after-clamping 80 Nm [60 ft lb]
- Tighten the hexagon nuts with 180 Nm [133 ft lb].

Pay attention also to the notes in the *Maintenance overview*.

NOTE

Check the sliding tube of the sliding axle daily for damage/wear. Action must be taken if deeper scratches are noticed. Contact HORSCH Service for this purpose.

Hydraulic track width adjustment (TrackControl)

- The desired track width can be set via the terminal. Refer to the respective section of the *Terminal operating instructions*.

Height adjustment

CAUTION

The machine's centre of gravity shifts upward when changing the height.

- Adjust the travel mode accordingly.
- Avoid extreme situations such as driving on slopes!

3 equipment variants are available for height adjustment:

No height adjustment

- No adjustment possible

Mechanical height adjustment

- The undercarriage can be lifted by 400 mm via a spacer (rod) if desired. Refer to the section *Mechanical height adjustment*.

Hydraulic height adjustment (Clearence-Control)

- The desired height can be selected via the terminal.

NOTE

Adjust the height before setting the track width. The track differs between top or bottom when performing the height adjustment.

Mechanical height adjustment

⚠ WARNING

Increased risk of accident during height adjustment!

- Pay attention to the notes from the safety chapter!
- Always adjust the height only one axle at a time; never raise the complete machine.
- Use the lifting equipment supplied for raising
- Perform only on a level and firm surface.
- Secure the vehicle against rolling.
- Drain the spraying mixture container and the fresh water tank.

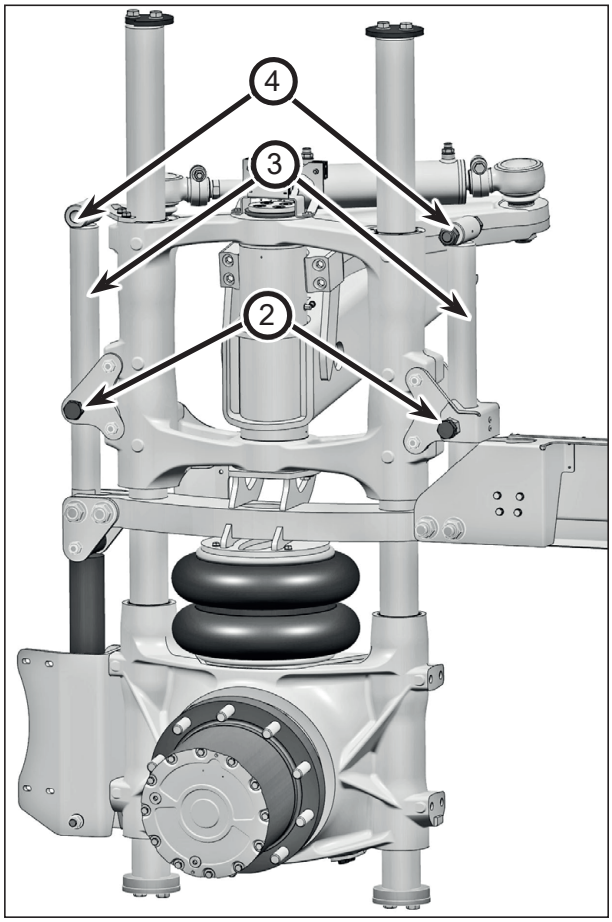

Wheel suspension mechanical height adjustment (the figure shows the left front)

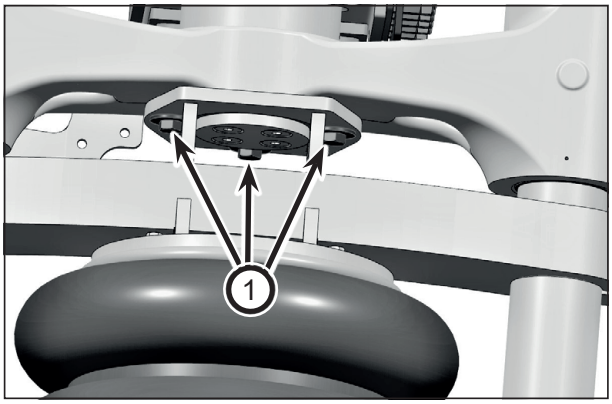

Locking screw detail

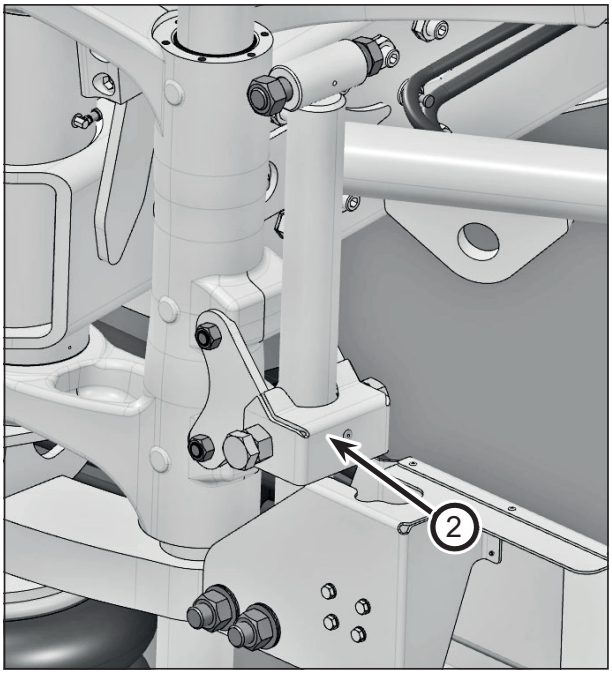

Retaining plate

Height adjustment up procedure:

- Drain the spraying mixture container and the fresh water tank.
- Park the machine on level and paved ground.
- Secure the machine against rolling away.
- Place suitable lifting equipment to a suitable spot and apply light pressure.
- Remove the three locking screws (1) and screw them in again after the height adjustment. Tightening torque: 64 Nm
- Remove the locking plate (2) including screws and store safely.

- Remove the screws (4) including wedge-type lock washers.
- Raise the lifting equipment.
- Use the rods (3) to thread in new wedge-type lock washers (Art. No. 00371059 and screws (4) with washers) and tighten. Tightening torque 1000 Nm [738 ft lb].
- Lower the vehicle and continue with the second axle as described.

NOTE

To ensure secure clamping, both guide tubes must be free of dust, oil and grease!

Height adjustment down procedure:

- Drain the spraying mixture container and the fresh water tank.
- Park the machine on level and paved ground.
- Secure the machine against rolling away.
- Place suitable lifting equipment to a suitable spot and apply light pressure.
- Remove the three locking screws (1).
- Lift the lifting equipment, remove the screws (4).
- Lower the lifting equipment.
- Screw in the three locking screws (1) to secure the joint. Tightening torque 64 Nm [47 ft lb].
- Reinsert the retaining plate (2) to secure the rod (3) and tighten with screws. Tightening torque 64 Nm [47 ft lb].
- Retighten the screw (4) with wedge-type lock washers and nuts. Tightening torque 64 Nm [47 ft lb].
- Retighten the screws (1), (2) and (4) after 100 operating hours.

NOTE

Wedge-type lock washers may be used only once! If necessary, perform the settings on the terminal for machines with automatic steering. Refer to the notes in the maintenance table when performing maintenance. Retighten the screws (1), (2), (4) after 100, 600, 1200, 1800 h (mechanical and hydraulic height adjustment):

- (1): 64 Nm [47 ft lb]
- (2): 64 Nm [47 ft lb]
- (4): 1000 Nm [738 ft lb]

In addition, retighten all screws after 100 h each time the height is adjusted.
Pay attention also to the notes in the *Maintenance overview*.

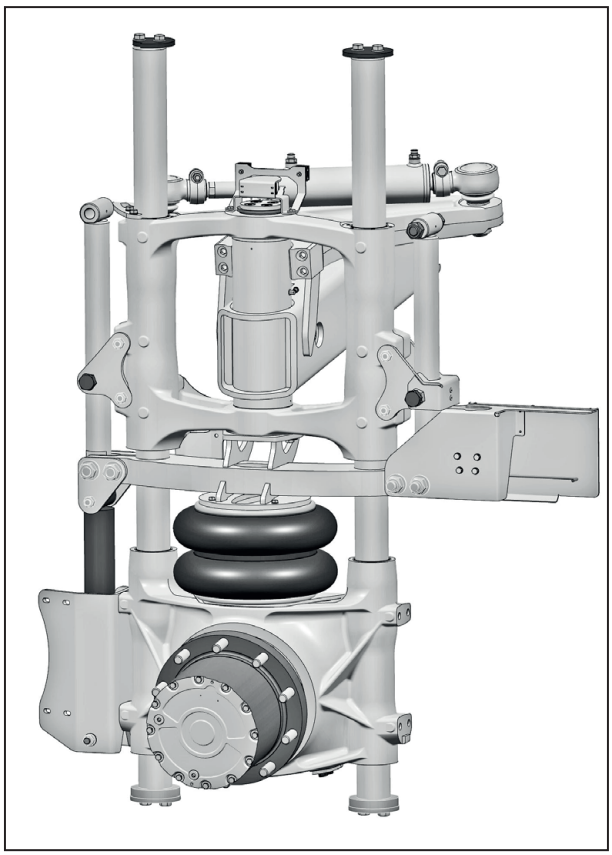

Mechanical height adjustment lower position, right rear view

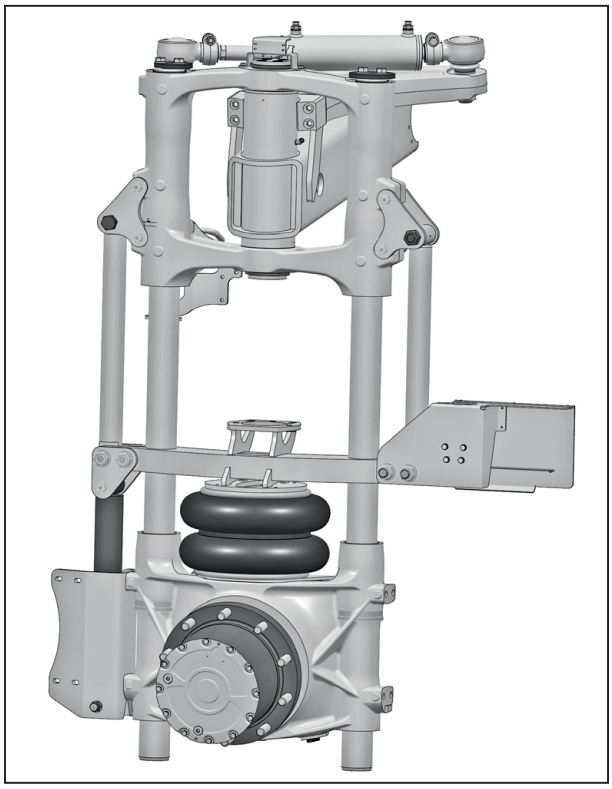

Mechanical height adjustment upper position, right rear view.

Suspension (ComfortDriveFlex)

Refer again to the *Commissioning* section for this purpose.

Leeb VL

The pneumatic independent suspension includes a level control independent of the load condition.

Level valve with folding boom

Folding boom level suspension hooked up

To minimise the transport height, the folding boom for the level suspension may be unhooked. This must be done separately for each axle and each wheel.

NOTE

The folding boom must be attached in standard operation. Bolt down the folding boom as shown. This must be done separately for each axle and each wheel.

WARNING

Danger of crushing for body parts between undercarriage and body when lowering the machine!
Order persons to leave the danger zone around the machine.

Leeb VN

The hydropneumatic suspension includes an automatic level control, independently of the load condition. Operation is done via the machine terminal. Follow the *Terminal operating instructions*.

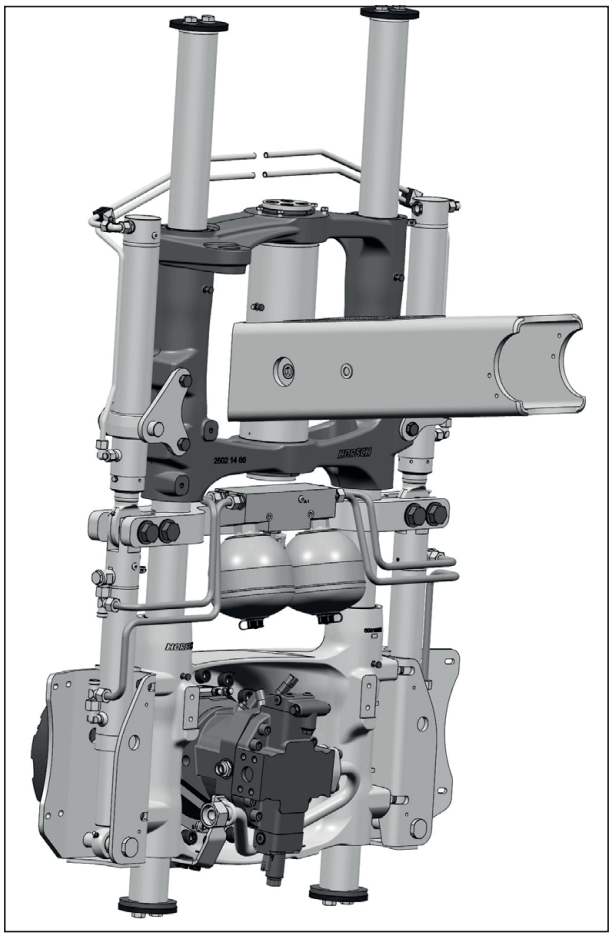

Hydropneumatic suspension, left rear view

The undercarriage height can be varied by 400 mm (0-100%) between the minimum and maximum setting.

- For road travel the undercarriage is lowered automatically to the minimal setting.
- In the field, the undercarriage height can be adjusted up or down.

WARNING

Danger of crushing for body parts between undercarriage and body when lowering the machine!
Order persons to leave the danger zone around the machine.

Mechanical release device

⚠ WARNING

Danger of uncontrolled machine movements.

- The purpose of mechanical release devices merely is to bring the machine as quickly as possible to a HORSCH specialist workshop and to have a possible defect repaired.
- Mechanical release devices are not intended for continuous operation!

The hydraulic valve blocks of the mechanical release device are located on the rear of the machine between parallelogram connection and spraying mixture container or at the right front.

Positions of the release devices

⚠ NOTE

After carrying out a repair, the respective valves of the release devices must be reset to their original state!

Mechanical release device folding boom block / parallelogram and Load Sensing activation

In case of faults of the parallelogram lift, for release of the folding boom block and for Load Sensing activation, mechanical release devices are located at the module block. With these valves the safety valves can be bypassed as long as the hydraulic pressure supply is intact.

- To release the parallelogram lift and the folding boom block, manually actuate the hydraulic valve V80 (1) by removing the cap.
- To release the Load Sensing connection, actuate the hydraulic valve V20 (2) manually, turn down the small screw on top of the release device fully clockwise.
- After the repair has been carried out, reset the screw of the release device to its original state!

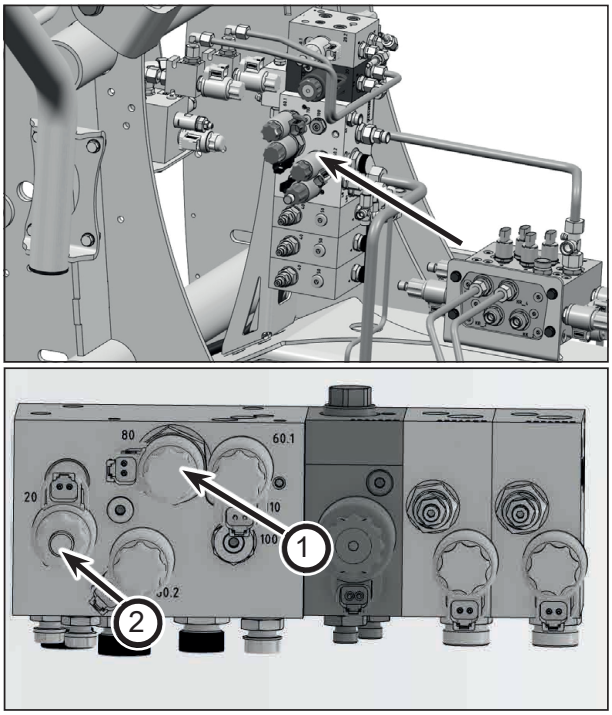

1 Release device parallelogram lift/folding boom block

2 Release device Load Sensing activation

Mechanical release device spraying pump and fan

In the event of an electrical defect, there is a hydraulic valve block at the right on the hydraulic pump for mechanically releasing the spraying pump or the fan. With this valve the spraying pump or the fan can be selected as long as the hydraulic pressure supply is intact.

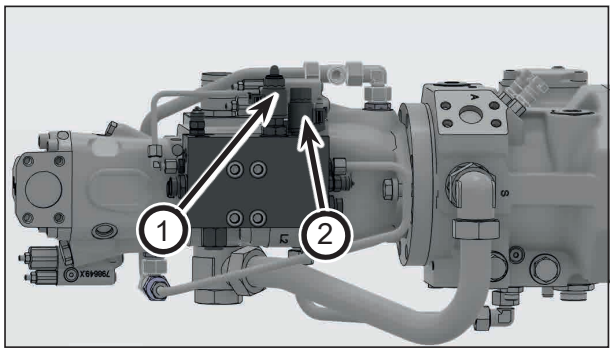

1 Mechanical release of spraying pump
2 Mechanical release of fan

Spraying pump

- Screw in the small screw on the top of the release device (1) to the right until the spraying pressure in the spraying boom has the desired value.
- In this way any remaining chemical can, if necessary, be placed before a repair is carried out.
- After repair work has been carried out, unscrew the screw of the release device to the left.
- Contact HORSCH Service for troubleshooting.

Fan

In the event of an electrical defect of the valve on the hydraulic venting device, cooling of the engine, the hydraulics, the charge air and the A/C system will no longer work and the machine is therefore no longer cooled.

- Using the release device (2) a speed can be specified on the fan to cool the cooler package again.
- Turn in the screw of the release device (2) toward the right. This increases the fan speed and the machine cooling works again.
- After repair work has been carried out, unscrew the screw (2) of the release device to the left.

Mechanical release device of access ladder

In the event of an electrical defect, a valve for mechanical release is located on the hydraulic valve block for the access ladder. The hydraulic valve block is located next to the cabin. With this valve the ladder can be raised and lowered as long as the hydraulic pressure supply is intact.

Mechanical release device of access ladder

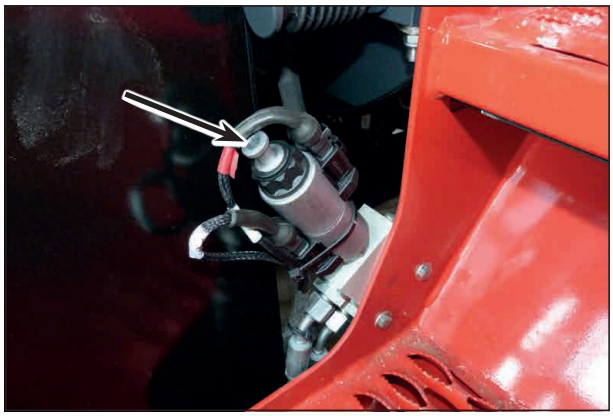

Valve for mechanical release of access ladder

Access ladder

- Loosen the knurled screw.
- Lifting the ladder: Push in the small pin on top of the release device until the pin has engaged.
- Lowering the ladder: Pull out the small pin on top of the release device until the pin has engaged.
- Tighten the knurled screw to secure the ladder position.
- After the repair has been completed, return the screw of the release device to the centre position and secure with the knurled screw.
- Contact HORSCH Service for troubleshooting.

NOTE

The ladder can only be raised/lowered via the arm rest buttons when the door is closed.

Mechanical release device for hydraulic track width adjustment (TrackControl) (optional)

In the event of an electrical defect, a release device for hydraulic track width adjustment (optional), for the directional release, is located at the module block. As long as the hydraulic supply is intact, the left or right valve on the hydraulic valve block can be opened to retract or extend the axle.

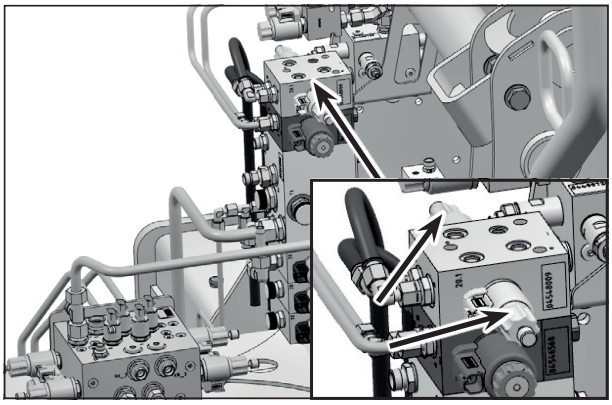

- In addition, open the four safety valves on the front axle and the four valves on the rear axle completely.
- Start the engine. Set the desired track width.
- After the track width has been set, reset the safety vales as well as the valve for directional release to their original state.
- Contact HORSCH Service for troubleshooting.

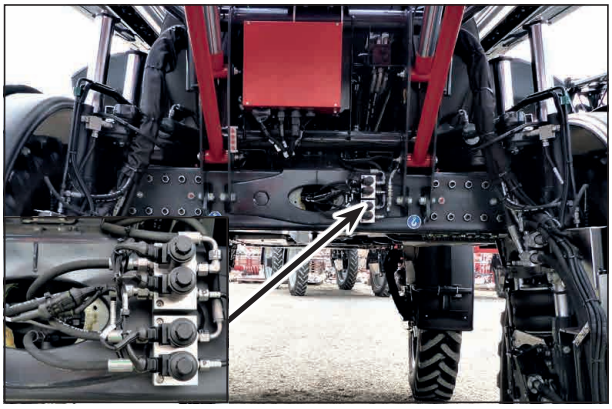

Mechanical release device TrackControl rear axle

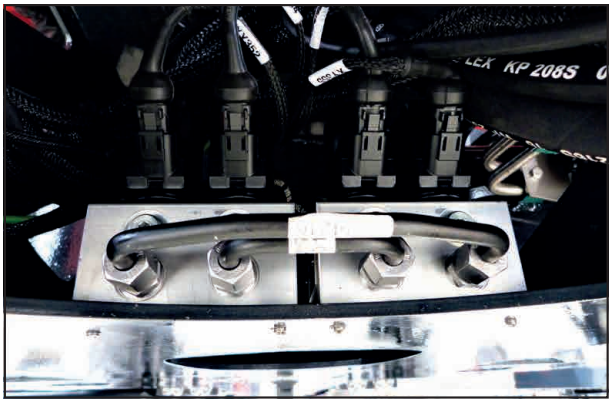

Mechanical release device TrackControl front axle

Mechanical release device hydraulic height adjustment ClearenceControl (optional)

In the event of an electrical defect, mechanical release devices are located on the hydraulic valve block for the height adjustment. The height adjustment can be lowered with the 4 valves.

- Turn in the small screw on top of the valves toward the right until the undercarriage has been completely lowered on all 4 struts.
- After the repair has been carried out, reset the valves to their original state.

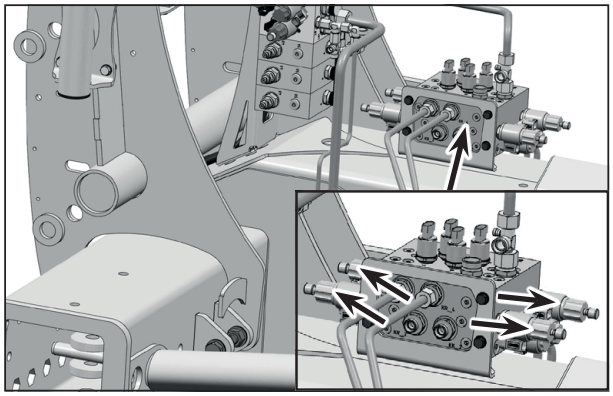

Hydraulic valve block ClearenceControl, 4x release valves installed

DANGER

Severe accidents by crushing!

- Ask all persons to leave the danger zone when lowering.

Mechanical release device hydropneumatic suspension (only Leeb VN)

In the event of an electrical defect, mechanical release devices are located on the hydraulic valve block for the hydropneumatic suspension. The suspension can be lowered with the 4 valves.

- Turn in the small screw on top of the valves toward the right until the undercarriage has been completely lowered on all 4 struts.
- After the repair has been carried out, reset the valves to their original state.

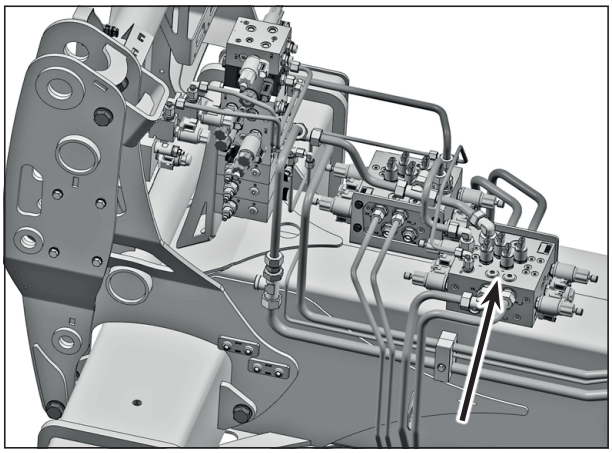

Hydropneumatic suspension hydraulic valve block, 4x release valves installed

DANGER

Severe accidents by crushing!

- Ask all persons to leave the danger zone when lowering.

Maintenance access

Maintenance access is via the swivelling access ladder.
The access ladder is lowered or raised from the driver's cabin.

⚠ DANGER

Serious accidents by falling down!

- No passengers are allowed to ride on the machine!
- When climbing on the maintenance access always maintain contact on at least 3 points (hands or feet) of the access steps.

Railing at left folded up

Railing at right folded down

Platform railing

The railing on both sides of the platform can be folded down or up by hand. It is imperative when working in the maintenance area to fold up the folding boom in the interest of one's own safety. The railing must be folded down to allow folding in the folding boom. Otherwise, the folding boom will fold down the railing when folding it in. This may damage the paint coat on the folding boom and the railing.

⚠ DANGER

Serious accidents by falling down!

- No passengers are allowed to ride on the machine!
- The railing must be folded up when working in the maintenance area.

Cooler package

Always check the cooler package behind the cabin for soiling before driving off and clean with compressed air, if necessary.

Always keep the stainless steel screen under the step grille clean. To clean the screen, stop the engine and fold up the step grille. If necessary, remove the sieve and clean it with compressed air or water jet.

Stainless steel sieve and step grille

The cooling fins of hydraulic oil cooler, radiator, air conditioning cooler and charge air cooler must always be kept clean. Clean with much water and little pressure if necessary.

Cooler package

Air filter

⚠ WARNING

Danger of burning on hot engine components. Any maintenance work on the air intake system must only be carried out with the engine shut off and cooled down.
Pay attention to possibly contaminated dust in the filter. Do not inhale it and avoid skin contact. Do not blow out or suction out the filter. Dispose of filter properly.

The air filter is located behind the cabin under the covering. This must be checked regularly and replaced at the specified intervals, see chapter *Maintenance*. Pay attention to the above warning.
If the warning indicator lights on the terminal, the main filter element needs to be replaced.

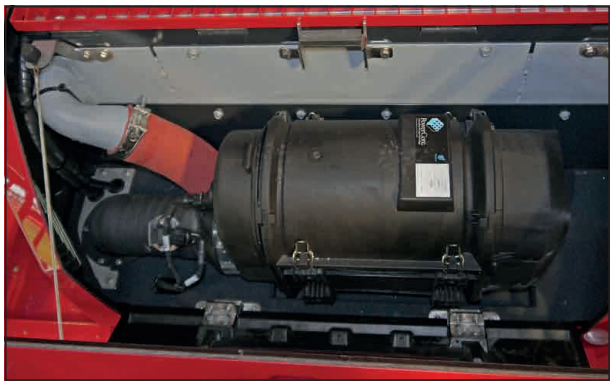

⚠ NOTE

If the air filter is heavily contaminated, this is indicated by a warning symbol on the terminal.
If the preliminary filter system (e) is heavily contaminated it must be dismantled and cleaned.
A defect or missing Vacuator valve (f) must be replaced.
The tightening torque of the screw clamp (g) must be in the range of 3.5+/- 0.5 Nm [2.6 +/- 0.38 ft lb].

Overview of components

The air filter consists of the following components:

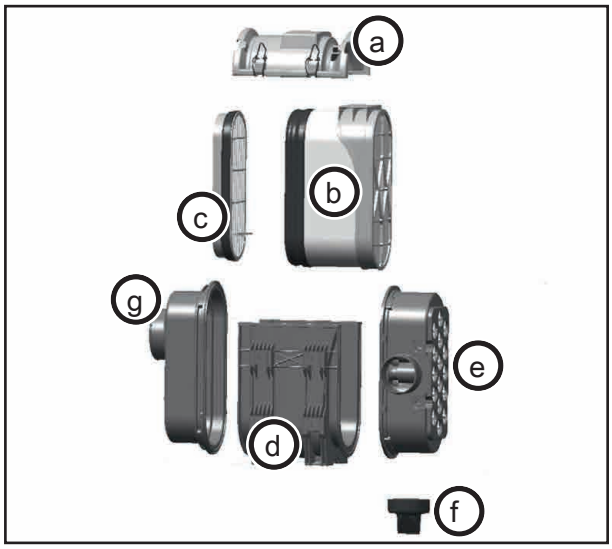

(a) Housing lid with fastening clips
(b) Main element / primary filter
(c) Safety element
(d) Housing
(e) Preliminary filter system
(f) Vacuator valve
(g) Screw clamp

Disassembling / cleaning the air filter

Shut down the vehicle engine before starting work on the air filter. With all work make sure not to damage any seals and not to bring dirt into the housing.

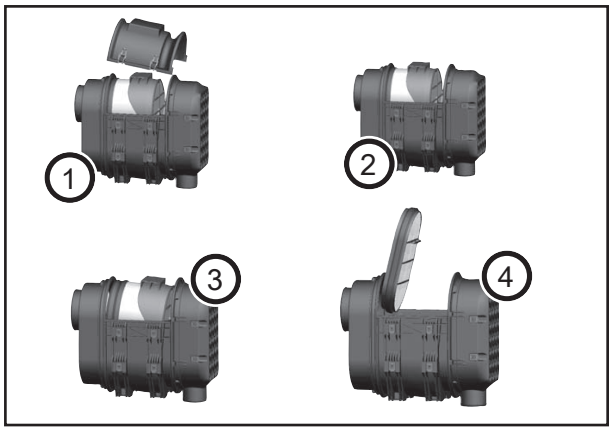

1. Open the clips on the housing cover (a) and remove the lid.
2. Push the main element (b) at a slight angle of 5° towards the front.
3. Remove the main element (b).
4. Remove the safety element (c).

NOTE

Never wash out or brush off the main element (b). When blowing it out no dust should enter the inside of the main element. Do not continue to use a damaged element. If in doubt, use a new main element.
If the contamination indicator is still visible in the display after cleaning, replace the main element! Replace the main element after 1200 h or annually. Refer also to the *Maintenance* chapter.

Installing the air filter

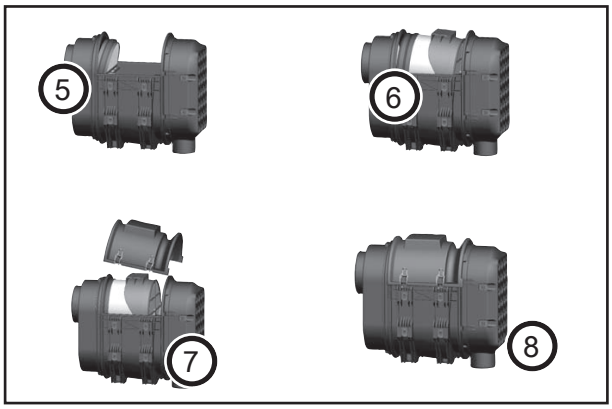

NOTE

Check the main element (c) for damage, cracks and cuts before installation.

5. Install the safety element (c).
6. Insert the main element (b) into the housing and push it in under a slight angle of 5°.
7. Attach the housing cover (a) to the housing and close the clips.
8. Check visually.

NOTE

Change the safety element:

Replace the safety element (c) after 2 years or 2400 operating hours! See chapter *Maintenance*. Refer to the HORSCH maintenance log for records and enter when replacing!

Air conditioning system

Components

- Compressor (on the engine at the right in direction of travel, driven via ribbed V-belts)
- Condenser (via coolant cooler)
- Dryer cartridge (behind the cabin under the covering near the oil pan)
- Evaporator (under cabin roof)
- Pressure switch (on the dryer cartridge)
- Expansion valve (under cabin roof)
- Air conditioning unit (in cabin, roof console)

Refrigerant

NOTE

The air conditioning system is operated with the refrigerant R134a (tetrafluoro-ethane). This substance does not contain any chlorine atoms and is thus harmless for the ozone in the atmosphere.
The refrigerant must not simply be drained off, bust must be professionally disposed of. Connecting lines must therefore not be disconnected. Have maintenance and repair work on the air conditioning system solely carried out by your HORSCH sales partner, when necessary, using appropriate waste disposal and recycling facilities.

Refrigerant R 134a	
Chemical designation:	1,1,1,2-tetrafluoro-ethane
Chemical formula:	$CH_2F\ CF_3$
Freezing point:	-101.0 °C [-150 °F]
Critical temperature:	-101.1 °C [-150 °F]
Critical pressure:	40.60 bar [588 psi]
Features:	non-toxic, not inflammable, inoffensive to ozone
Most important safety aspect:	Danger of suffocation in high concentrations, can cause frost injuries

NOTE

Refer to the safety data sheet of the refrigerant for further details.

Drier cartridge air conditioning system

NOTE

The ambient temperature must be higher than the temperature set on the thermostat (normally +1 °C [34 °F]) so that the compressor will cut in.

Dryer cartridge below the oil pan

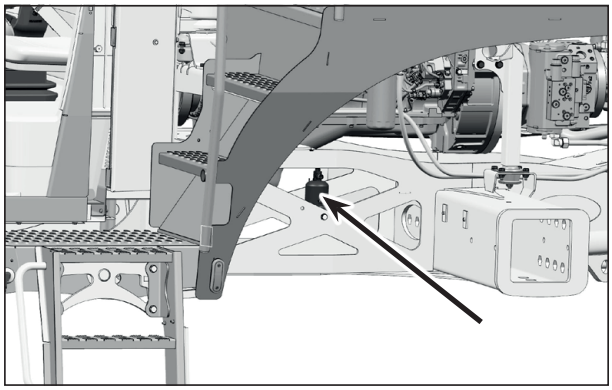

Dryer cartridge position

Pressure switch

The air conditioning system is equipped with a pressure switch, which switches the system off in case of overpressure or vacuum.
This is attached to the dryer cartridge.

Dryer cartridge pressure switch

Condenser

- Check the condenser for soiling.
- Clean the condenser depending on the degree of contamination, but at least once per month
- Blow out the condenser with compressed air but take care to avoid damaging the fins.

NOTE

- Always keep the condenser clean!
- Do not use high pressure cleaner for cleaning!
- Do not clean crosswise toward the fins!

Checking refrigerant condition and filling quantity

Maintenance as needed
Have air conditioning system checked and, if necessary, repaired by an authorized expert workshop.

NOTE

Maintenance work on the air conditioning system, which requires intervention in the refrigerant circuit (e.g. refilling refrigerant, replacement of collector/dryer), must only be carried out by authorized expert workshops! It must be entered in the maintenance log!

Windscreen washing system

The tank is located behind the driver's cabin under the covering.
Open the lid of the tank to fill the windscreen washer system.
Fill the container for windscreen wiping water as required. Use only clean water, as otherwise the nozzles may get blocked.

Filling capacity max. 4 litres [1 gal].

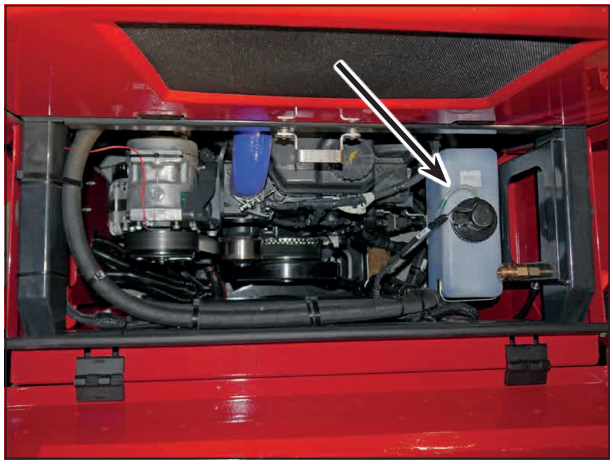

Windscreen washing system tank

It is recommended to add a windscreen washing agent to achieve a better cleaning effect.

NOTE

Drain the washing system in the winter or use windscreen cleaner with appropriate frost protection. Operate the windscreen cleaning system to empty all lines or to flush it with the windscreen cleaner containing the frost protection. Follow the manufacturer's specifications on the mixing ratio of frost protection: water.

Compressed air system

Two air reservoirs are installed on the machine. The first is located under the cabin, the second in the middle of the parallelogram. They must be drained daily before starting work by operating the valve!
On the right side in the middle section of the folding boom there is a filter-regulator combination. These must be checked daily and drained if necessary.

- Pull the drain valve until water stops running out from the air reservoir through the valve.

In case of contamination unscrew the drain valve from the air reservoir and clean the air reservoir. To do this, stop the engine and relieve the pressure beforehand.

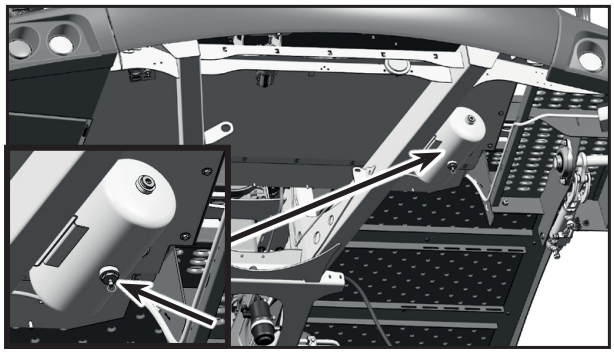

Air reservoir under the cabin with drainage valve

Parallelogram air reservoir with drainage valve

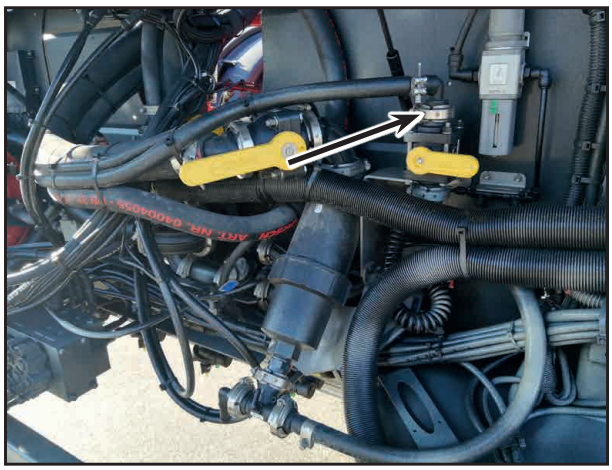

Water separator and filter-regulator combination

NOTE

The filter-regulator combination will drain itself when full. However, the system can also be drained manually. Remove the collecting vessel of the filter regulator to this end. Release the pressure before drainage!
When preparing the machine for winter storage, check whether the filter-regulator combination is empty. Drain them manually if necessary.

NOTE

The dryer cartridge must be changed if water has collected in the air reservoir!

Compressed air system dryer cartridge

A dryer cartridge is located on the machine which cleans the compressed air provided by the compressor from water and other contaminations. This dryer cartridge must be replaced according to the maintenance interval.

Dryer cartridge replacement:

- Unscrew the dryer cartridge.
- Slightly oil the seal of the new dryer cartridge.
- Screw down the new dryer cartridge.

Compressed air system dryer cartridge position

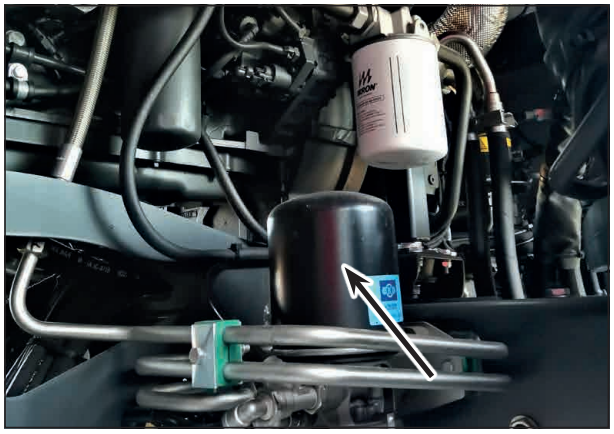

Compressed air system dryer cartridge

NOTE

Refer to the information in the maintenance table regarding the maintenance interval.

Electrics

Battery

The battery is located on the right side of the machine behind the cabin under the covering. The self-propelled crop protection sprayer has one 12-Volt electrical system.

12 Volt - power supply	
Generator power	14 V / 200 A
Number of batteries	1
Battery voltage	12 V
Battery capacity	180 Ah

NOTE

Further information on the electrical system (circuit diagrams etc.) is available from HORSCH Service.

12-volt electrical system (right behind the cabin)

Danger when handling batteries

CAUTION

- Only perform repair, care, maintenance and cleaning work with the machine at standstill. Shut down the engine. Pull out the ignition key. Secure the machine against rolling away.
- Repair and maintenance work must only be carried out by authorized experts.
- Avoid the creation of sparks or naked flames in the vicinity of the battery.
- When working on the electric system or on the engine the battery must always be disconnected.
- When removing the battery always disconnect the earth cable first and the plus cable after.
- Pay attention to the manufacturer's notes on dangers on the batteries!

NOTE

The following is generally valid: Always keep batteries clean from dust and crop residues!

Cleaning the batteries

- Clean the battery, if required.
- Remove possible oxidation from the terminal clamps with a brush.
- Use pole grease if necessary.
- Keep the ventilation openings in the plugs open.

Check general condition of batteries

- Check fluid level / acid level of the battery at regular intervals, top up if required.

Installing and connecting battery

- Always connect the battery with correct polarity.
- When installing a battery always connect the plus cable to the plus pole, then connect the minus cable to the minus pole.
- Failure to comply with the correct polarity between battery and three-phase alternator causes severe damage.

Battery main switch

On the right side in the cabin, there is a main battery switch for immediate disconnection of the engine and vehicle electrical circuits.

The red switch is used to shut off the current supply early. The battery is disconnected from the vehicle electrical system without overrun time. The diesel engine shuts itself off. The exhaust gas treatment (optional) keeps running for another 15 minutes until final shut-down.

Three-phase alternator

- Always disconnect the battery main switch before starting work on the electric system. Then remove the negative cable from the battery to prevent damage.
- Protect the cable contacts of the positive cables against accidental contact with battery contacts.

Starter

- Always disconnect the battery main switch before starting work on the electric system. Then remove the negative cable from the battery to prevent damage.
- Protect the cable contacts of the positive cables against accidental contact with battery contacts.

Possible faults and proposed remedies

- Loose, dirty or corroded cable connections:
  - Clean the cable connections on the starter and tighten the connections.
  - Clean the earth cable on the engine and tighten the connections.
- Battery power too low:
  - Check for voltage drop on batteries, if necessary, recharge the battery.
- Discharged battery:
  - Charge the battery.
- Starter safety relay defective:
  - Replace the relay

NOTE

If the listed suggestions do not lead to the rectification of a damage, contact the HORSCH Service.

Transport and safety container

There is a transport and safety container on the right and left side of the machine. It is used to store personal protective outfit and accessories. Parts of the personal protective outfit may only be carried with the device if they are packed in a liquid-tight manner. Clean and contaminated protective outfits can thus be transported separately.

Transport container on the right side of the machine

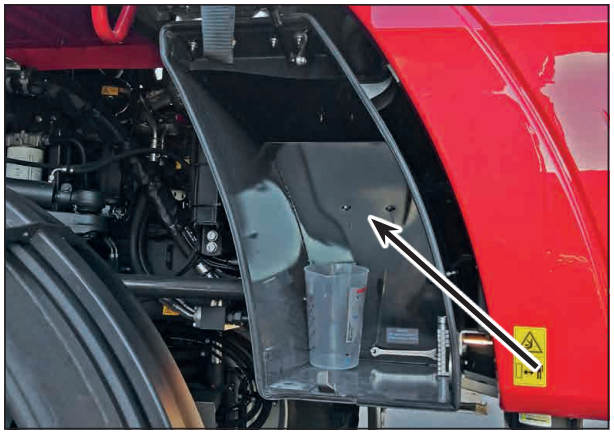

Transport container on the left side of the machine

⚠ WARNING

To avoid contamination of the cabin, it must not be entered with used protective outfit!
The personal protective outfit must be stored packaged liquid-tight in the transport and safety container provided.

- In addition, the transport container contains a tool holder in which a metering cup, filter wrench, assembly wrench, etc. can be stored.

Tool storage

A storage compartment for tool storage is provided at the right front next to the cabin.

Tool storage compartment

Cabin

Access ladder

⚠ WARNING

Insufficient stability of access steps can lead to falls and injuries.

- Make sure the ladder is fully lowered when leaving the cabin.
- When climbing up and down, always maintain contact on at least 3 points (hands or feet) of the ladder. Always face the machine when climbing up or down.

⚠ WARNING

Danger of crushing by moving parts.
Riding on steps or platforms is not permitted. Keep stepping areas / steps clean at all times!

folding access ladder

Multi-function control panel

- Access ladder foldable via pushbuttons on the multi-function control panel in the cabin (keep button depressed)

  Button *1* = access ladder up

  Button *2* = access ladder down
- In street mode the access ladder can be folded up to a speed of 4 km/h.
- The access ladder can always be operated in field mode.
- When operating, make sure that there are no persons in the danger zone!
- Always use handles provided when climbing up or down!
- In case of a fault, the access ladder can also be folded manually.

The manual switches may override the automatic folding function.

Automatic folding

The *Automatic ladder folding function* can be activated on the machine terminal.

- Go to the *Vehicle settings* menu and open the *Automatic ladder function* submenu.

- If function 1 is activated, the ladder moves up automatically as soon as a travel speed of 3 km/h [1.9 mph] or more is reached.
- The green square indicates that the setting is active.

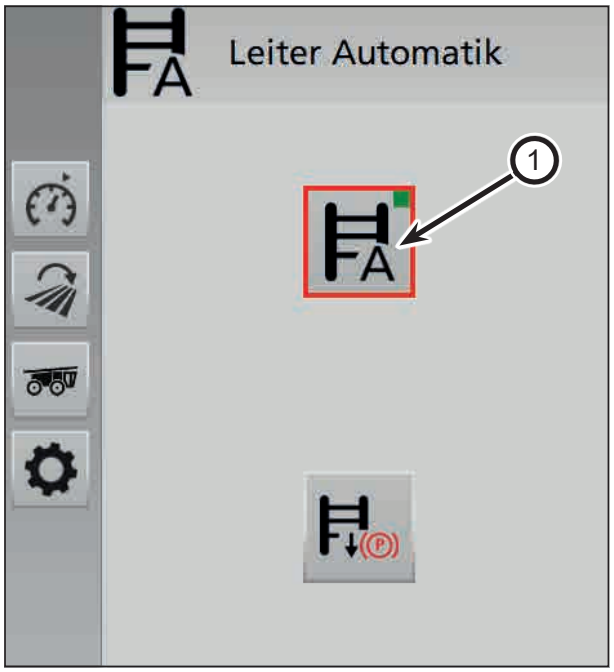

- If function 2 is activated, the ladder moves down automatically as soon as the machine is in the parking position. (Parking brake engaged)
- The green square indicates that the setting is active.

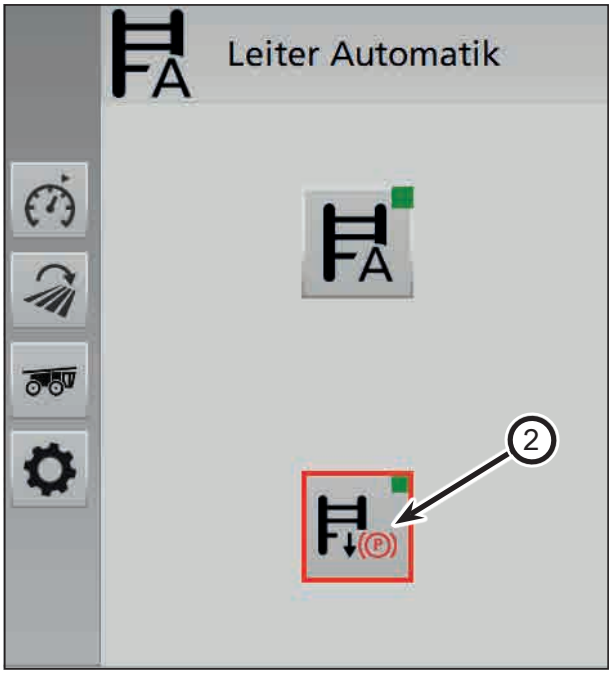

The position of the access ladder is indicated on the machine display. If the ladder symbol flashes with a question mark, the position of the access ladder is not defined.

Cabin door

NOTE

The cabin door must be kept closed before driving off and throughout operation.

➢ Unlock with the key, press the button and pull on the handle.

Door handle from outside

➢ Press the door opener lever up

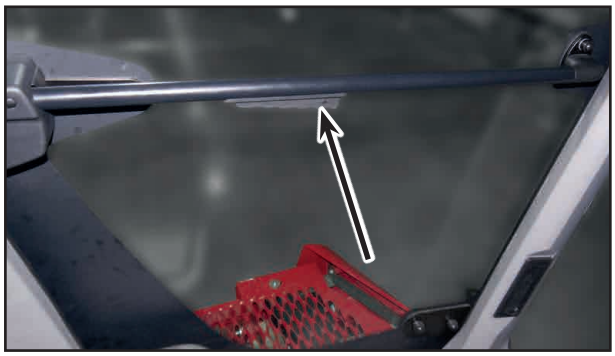

Door handle from inside

Overview

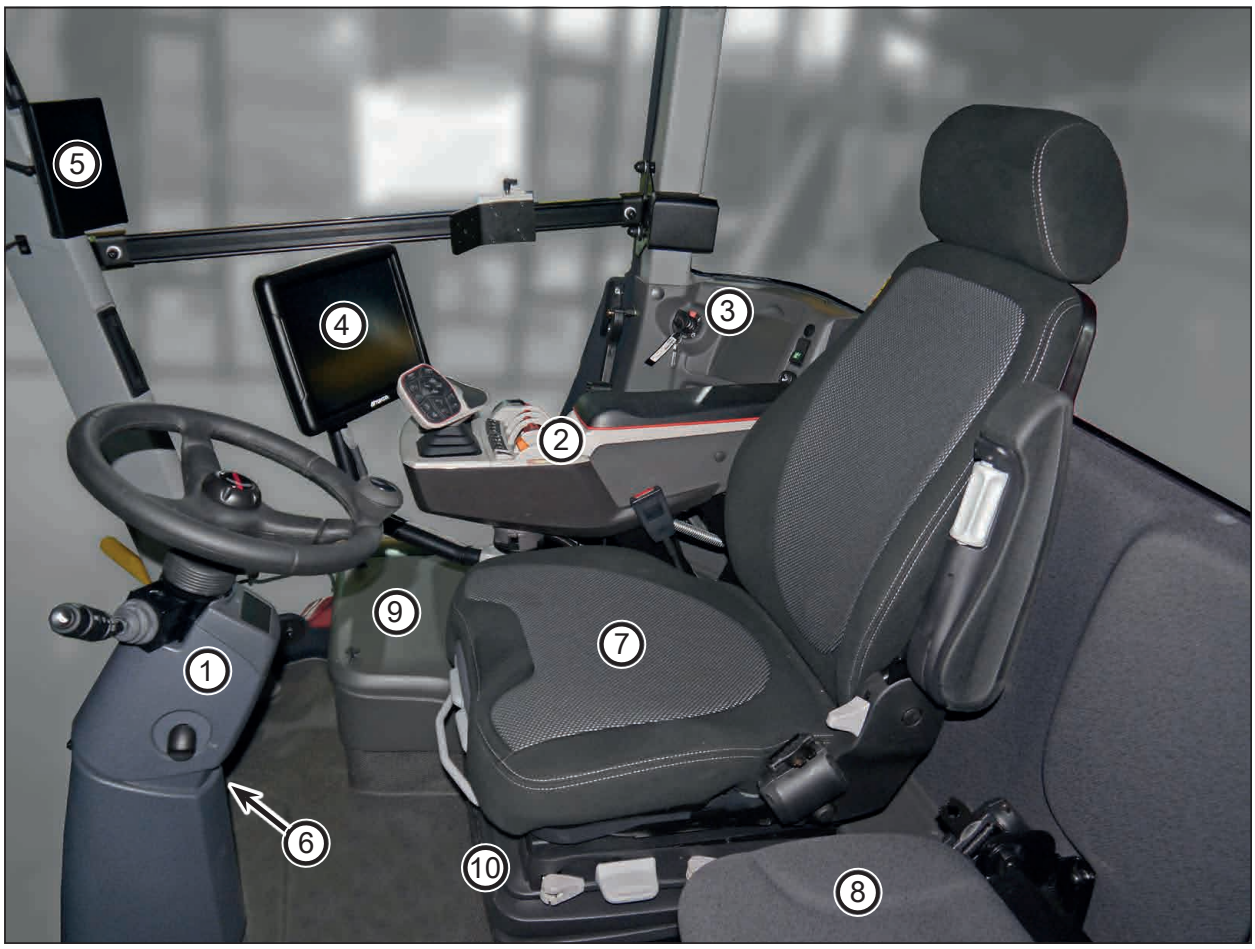

1 Steering column controls
2 Multi-function control panel
3 Ignition lock
4 Operating terminal
5 Machine terminal
6 Pedal
7 Driver's seat
8 Instructor's seat
9 Central electrics of machine
10 Tray/document box
11 Monitor for rear view camera (optional)

NOTE

Do not store any pointed, heavy objects on the floor of the cabin as they may cause the doors or front window to burst. Do not store any crop protection agent in the cabin.

Overview roof console

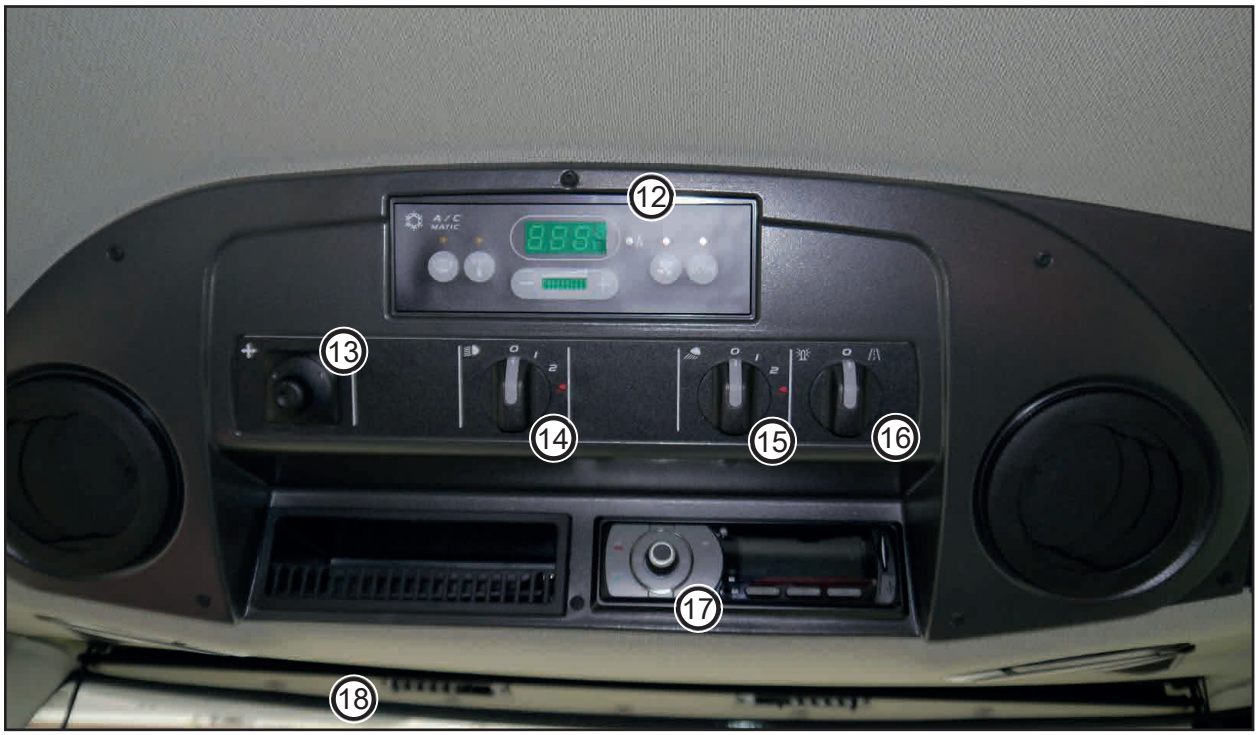

12 Operating elements Heating/air conditioning system
13 Adjustment of the electric outside mirror
14 Switching driving lights on/off
15 Switching work lighting on/off
16 Switching rotating beacon on/off
17 Radio
18 Sun visor

Overview roof console

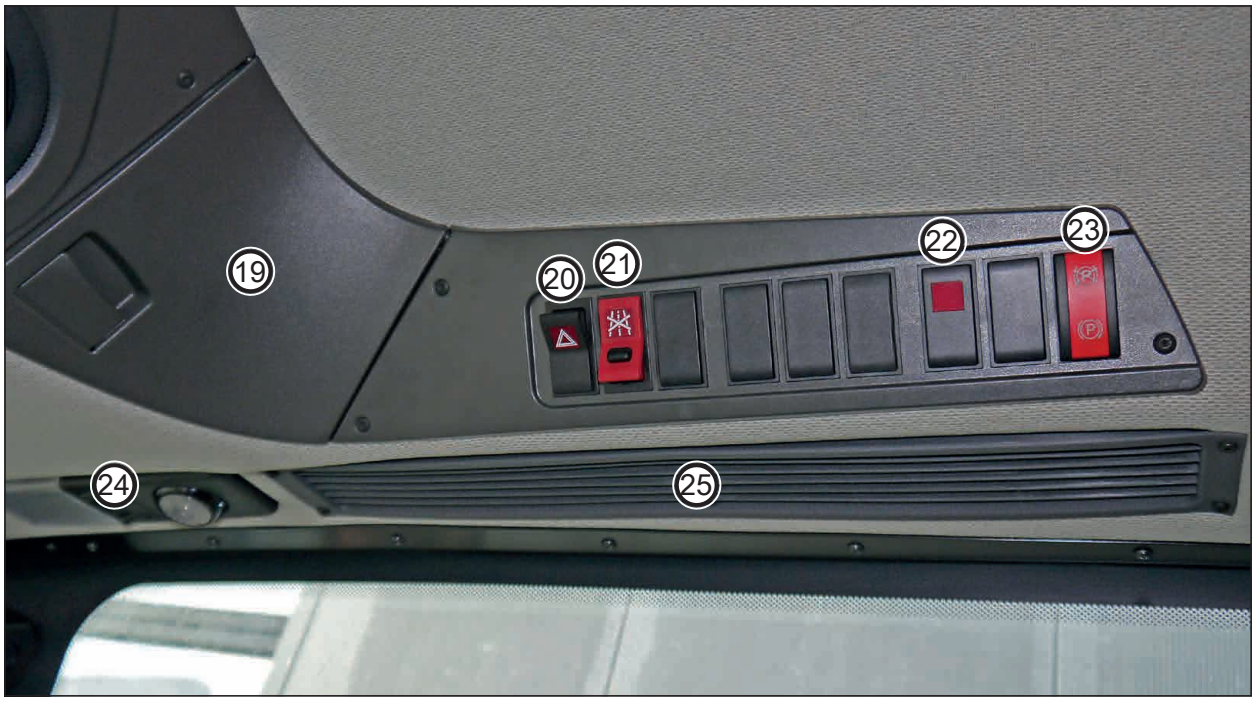

19 Storage compartment
20 Switch for hazard light system
21 Switch for road travel / field travel
22 Travel drive warning lamp
23 Switch for parking brake
24 Cabin lighting and reading lamp
25 Circulating air filter
26 Central electrics cab

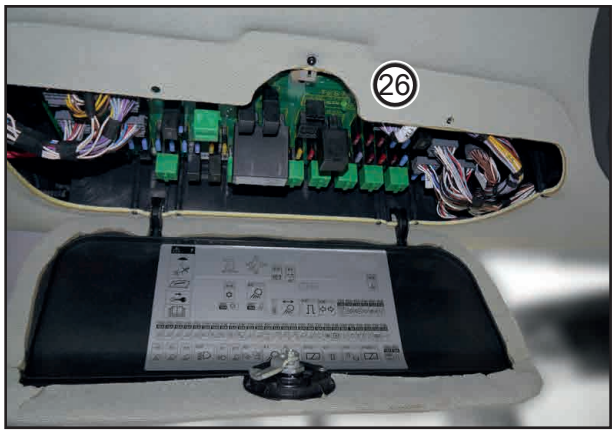

Overview roof console / A-pillar

27 Circulating air filter
28 adjustable fan nozzle
29 Radio loudspeakers

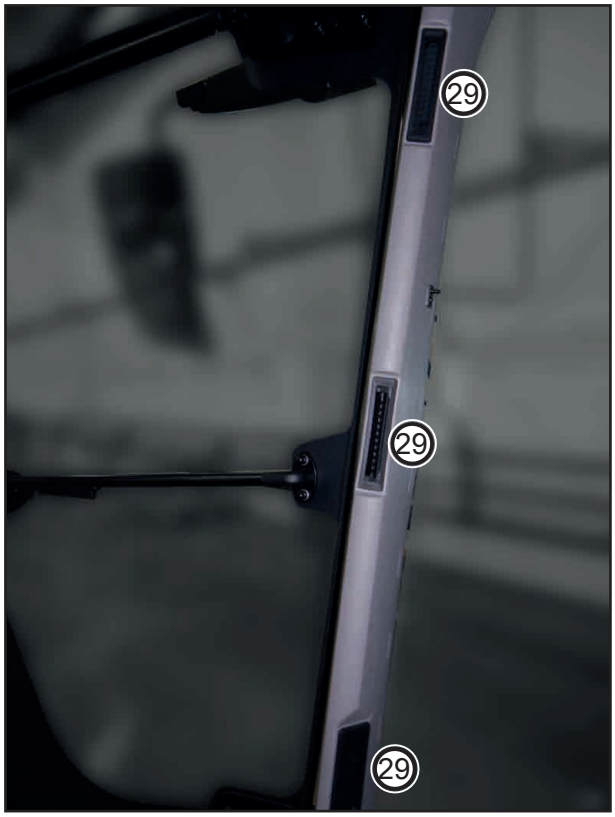

Driver's seat

A well-functioning and individually adjustable driver's seat is a prerequisite for keeping healthy. Regular care and function testing ensures the functionality of the driver's seat.
The function tests should at least be adapted to the maintenance intervals of the vehicle.
Wear items like rollers, shock absorbers and fastening elements must be checked from time to time.

⚠ CAUTION

Danger for persons due to a too small suspension range as a result of an incorrectly adjusted driver's seat.

- Before commissioning of the vehicle and with each driver change the weight setting must be adjusted to the individual weight of the driver. Do not store any objects in the suspension range of the driver's seat.
- Before commissioning check whether all adjustable features have been correctly locked in place. Do not operate any adjustable features during operation.

⚠ WARNING

Danger to persons in case of accidents by not wearing seat belts.

- Always wear your seat belt before commissioning the vehicle.

  After an accident the seat belts must be replaced.

  After an accident you should also have the driver's seat and its fastening checked by expert personnel.

⚠ WARNING

Danger to persons due to misuse of the seat occupancy detection.
Never load the seat area of the driver's seat with heavy objects as this could cause the vehicle to start moving without driver. In normal use relieving the seat area from any weight during travel brings the vehicle to a halt.

Overview

30 Right-hand arm rest with multi-function control panel
31 Seat area
32 Backrest
33 Left-hand arm rest with adjustable arm rest inclination
34 Seat belt

⚠ NOTE

Do not clean the driver's seat with a high pressure cleaner!
When cleaning the upholstery surfaces, soaking the cushions must be avoided.

- Test commercially available upholstery or plastic cleaners first in an inconspicuous place.

Weight adjustment

The respective driver's weight must be adjusted with the vehicle stopped and the driver's seat loaded by briefly pulling the automatic weight and height adjustment lever. Sit absolutely calmly when making the adjustment.

Height adjustment

The air-cushioned height adjustment can be infinitely adjusted.
The seat height can be changed by fully pulling or pushing the operating lever. If the top or bottom end stop of the height adjustment is thereby reached, the height will be automatically adapted to ensure a minimum suspension travel.

⚠ NOTE

To avoid damage operate the compressor for max. 1 min.

Horizontal suspension

Under certain operating conditions it is advantageous to switch on the horizontal suspension. This enables the driver's seat to better absorb impact loads in the direction of travel.

Position *a* = Horizontal suspension Off
Position *b* = Horizontal suspension On

- Once the position *a* has been set, the locking lever must engage in the desired position. Press the seat backward until it engages audibly.
- After locking it should be impossible to move the horizontal suspension to any other position.

Longitudinal adjustment

⚠ CAUTION

Risk of accident when operating the longitudinal adjustment while driving. Do not operate the locking lever while driving!

By pulling the operating lever up the longitudinal adjustment is released and the driver's seat can be moved forward or backward.

- Once the setting has been made, the locking lever must audibly engage in the desired position. The driver's seat should be locked against being moved to any other position.
- Do not lift the locking lever with your leg or calf.

Seat inclination adjustment

The inclination of the seat area can be individually adjusted.
Pull the left handle up to adjust the seat inclination. The seat can be inclined to the desired position by simultaneously putting weight on and off the front and rear seat areas.

Seat depth adjustment

The seat depth can be individually adjusted.
Pull the right handle up to adjust the seat depth. The desired position is reached by simultaneously pushing the seat area forward or backward.

Arm rest

The left arm rest can be folded back and adjusted in height, if required.

To adjust the height of the arm rest pry the round cap off the covering and loosen the hexagon nut (spanner width 13 mm) behind it. Move the arm rest to the desired position (5 catch positions) and tighten the hexagon nut (25 Nm)[18 ft lb]. Replace the covering cap.

Armrest inclination

The longitudinal inclination of the arm rest can be changed by turning then hand-wheel.
Turning towards the outside lifts the armrest at the front, turning towards the inside lowers it at the front.

Backrest adjustment

Pull the lever up to adjust the backrest. Do not press against the backrest while unlocking it.
The desired position is reached by simultaneously loading and unloading the backrest. Release the lever to lock again.

⚠ NOTE

After locking it should be impossible to move the backrest to any other position.

Lumbar support

By pressing the Plus or Minus switch on the rear of the backrest, the bulge of the backrest can be adjusted individually.

Lateral horizontal suspension

Under certain operating conditions it is advantageous to switch on the lateral horizontal suspension. This enables the driver's seat to better absorb impact loads from the side.
The suspension comfort can be switched on and off via the locking handle.

Seat heating / ventilation

The seat heating is switched on by flipping the switch on the left side of the backrest upward. The seat heating is switched off again by returning the switch to the centre position 0.

Ventilation is switched on by flipping the switch down and switched off by returning the switch to the centre position 0.

Stowage bag

The back of the back rest is equipped with a stowage bag.
To open the stowage bag, first pull the tab up and then open the lid of the stowage bag backwards.

Seat belt

Both the driver's and the instructor seat are equipped with a seat belt each.

- Always wear the seat belt!
- Do not open the seat belt while driving
- Pay attention to and comply with the corresponding country specific regulations and directives!

1. Pull the seat belt out of the belt retractor without jerking it.
2. Guide the seat belt as low as possible over the hip bones in the pelvic area.
3. Snap the tongue into the belt buckle.
   - Make sure that the seat belt is not twisted or pinched.
   - Make sure that the seat belt does not run over sharp edges or easily breaking objects.
4. To remove the seat belt, press the button and return the tongue of the belt to the retractor.

Instructor’s seat

NOTE

The instructor’s seat must solely be used during the instruction drive. Apart from this, no other person, except the driver, must remain on the machine or inside the driver’s cabin during operation of the machine (in the field).

The safety belt must always be fastened!

Instructor’s seat

The backrest of the instructor’s seat can be folded up when not in use.

Steering column

Steering column adjustment

⚠ WARNING

Risk of accident! The steering column must only be adjusted when the machine is at standstill. Never make adjustments to the steering column while driving!

The height and incline of the steering column can be adjusted to the driver.

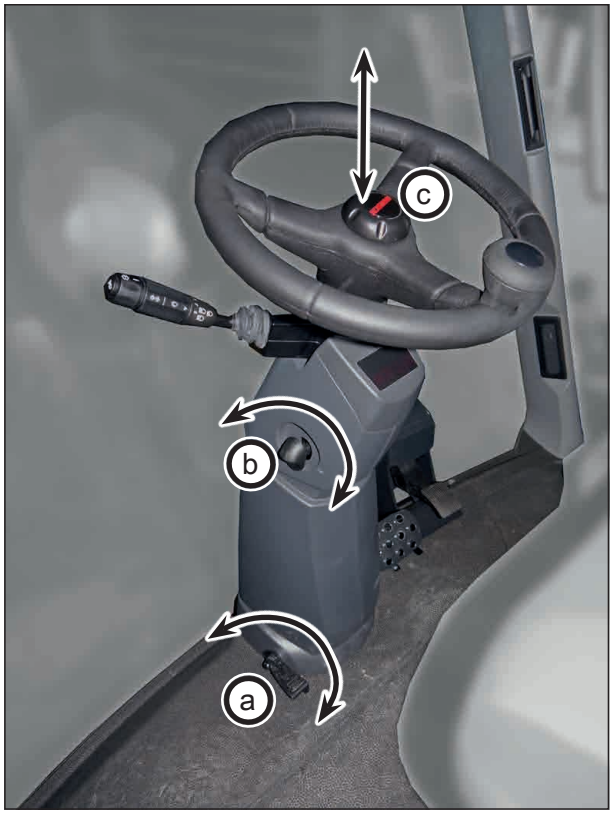

Overview of possible adjustments

(a) Swivel steering column
(b) Tilt the steering column
(c) Adjust the height of the steering wheel

Swivel steering column

- Grasp steering wheel by hand.
- Operate the lever (a) at the rear end with your foot.
  With the lever (a) actuated, swivel the steering column by hand to the desired position.
- Release lever (a).

The desired position is now locked.

Tilt the steering column

- Grasp steering wheel by hand.
- Push lever (b) upwards.
  With the lever (b) actuated, tilt the steering column by hand to the desired position.
- Release lever (b).

The desired position is now locked.

Adjust the height of the steering wheel

- Grasp steering wheel by hand.
- Turn the lid (c) a quarter turn to the left.
- Set the steering wheel to the desired position by hand.
- Turn lid (c) a quarter turn to the right.

The desired position is now locked.

Multi-function switch

The multi-function switch is used to operate the horn, windscreen wiper, windscreen washer system, direction indicator, high beam and headlamp flasher.

Horn

Press the button on the multi-function switch to operate the horn.

Windscreen wipers

- Check the cleaning effect of the windscreen wipers at regular intervals. A clear vision is mandatory for safe driving.
- Replace the wiper blades at the latest after one year.
- In case of dirty windscreen operate the windscreen washer system before wiping.
- Do not operate the windscreen wipers on iced up screens, because this could damage the wiper lips or even the wiper motor.

- To operate the windscreen wiper, turn the ring on the multi-function handle.

  Stage I = Intermittent

  Stage II = Continuous operation
- Turn the ring back to the initial position to deactivate the windscreen wiper.

Windscreen washing system

Press the ring on the multi-function switch to activate the windscreen washer system.

Travel direction indicator

Press the multi-function handle to activate the direction indicator at the front and rear of the machine.

- Lever up = direction indicator to the right
- Lever down = direction indicator to the left

High beam

To operate the high beam, press the multi-function handle down.
To dim it down, return the multi-function handle to the centre position.

Headlight flasher

To operate the headlight flasher, pull the multi-function handle up.

Driving information

Driving information is shown on the display.

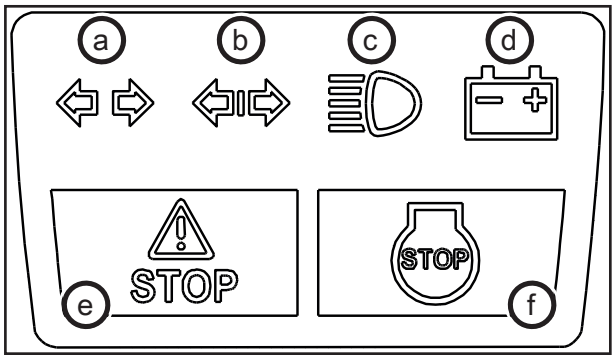

(a) Direction indicator lamp - Machine
(b) Direction indicator lamp - Trailer
(c) High beam indicator lamp
(d) Generator indicator lamp
(e) Main warning lamp
(f) Engine indicator lamp

Multi-function control panel

The multi-function control panel and the arm rest, which form one common unit, are located inside the cabin to the right of the driver's seat.

NOTE

After adjusting driver's seat and steering column you should check whether the multi-function lever can be optimally operated. If not, adapt the adjustment as required.

Longitudinal adjustment

- Longitudinal adjustment of the armrest by pulling up the rear lever on the right of the multifunction control panel and holding it up.
- Move the multifunction control panel forwards or backwards. If the setting is correct, release the lever again. The multifunction control panel must lock into this position.

The desired position is now locked.

Height adjustment

NOTE

When the lever is pulled up, the multifunction panel automatically moves up to the highest position.

- This can be avoided by pressing lightly on the armrest and holding the multifunction control panel at a height.

- Infinite vertical adjustment of the armrest by pulling up the front lever on the right of the multifunction control panel and holding it up.
- This can be lowered by pressing down on the multifunction control panel.
- The multifunction control panel can only be raised by pulling the lever upwards.
- If the setting is correct, release the lever again.

The desired position is now locked.

Overview of operator functions

The multi-function control unit is used to control functions for travel operation, spraying functions and other conditions of the self-propelled crop protection sprayer:

1 Drive lever
2 Multifunction operating panel for spraying
3 Freely assignable button
4 Rear axle steering on/off
5 Rear axle steering manual on/off
6 Rear axle steering slope mode on/off
7 Height adjustment/ suspension in slope mode on/off (optional)
8 Lift access ladder
9 Lower access ladder
10 Height adjustment transport/ service position (only with hydraulic height adjustment)
11 Freely assignable button
12 Operation of machine terminal
13 Switch for direction of travel selection
14 Maximum drive pedal speed control
15 Folding the folding boom wing in/out: Left outside wing, left inside wing, right inside wing, right outside wing, depending on the design of the Boom Control folding boom guide
16 Manual correction of rear axle steering with slope mode
17 Release button for travel drive
18 Not used
19 Activate/deactivate GPS steering
20 Not used

NOTE

The exact functions of the individual buttons and switches will be explained in the associated chapters!

Drive lever

The direction of travel and speed can be set with the drive lever. The release button on the rear of the drive lever must therefore be pressed in addition.

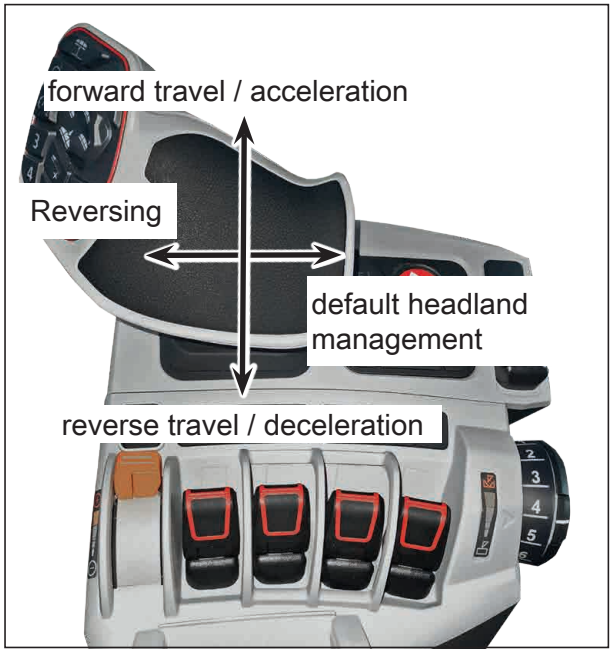

With manual steering, the rear axle is steered by moving the drive lever to the left or right. Reversing and headland management are then no longer possible.

Transport / Service position

The transport and service modes are only available on machines with hydraulic height adjustment and when the parking brake is engaged.

- Brief push of button:
  The machine lowers to service mode. The height adjustment is driven all the way down. The spring accumulators remain filled with pressure.
- Long push of button:
  The machine lowers to transport mode. The height adjustment is driven all the way down. The spring accumulators are emptied and run without pressure.
- In transport or service mode:
  Brief push of button: The machine returns to normal suspension mode.
- In service mode:
  Long push of button: The machine switches to transport mode.

Travel direction switch

After starting the engine and releasing the parking brake the travel direction must be selected. This is done via the travel direction switch.

- Lever forward = Pre-selection for forward travel
- Lever backward = Pre-selection for backward travel

Air conditioning / Heater

The climate control regulates the temperature and humidity in the cabin.
The following operating modes are available:

- Automatic temperature and fan control:

  Ideal for high outdoor temperatures.
- Manual fan control:

  Automatic temperature control with manual setting of the fan speed.
- ECON mode:

  Ventilation and heating without cooling function.
- REHEAT mode

  Dry cabin windows with continuous operation of the air conditioning compressor at maximum fan speed.

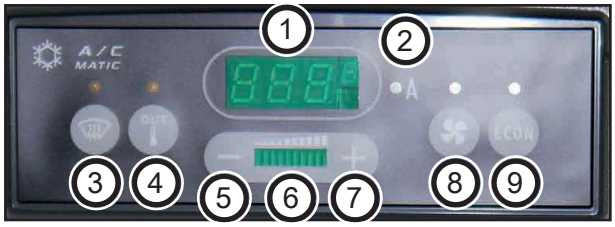

1 Display to show the desired cabin or outside temperature. Unit displayed in Celsius or Fahrenheit. In addition, the error codes for faults are shown on the display.
2 Function light indicates automatic mode.
3 Turn REHEAT mode on/off.
4 Toggles the display between the cabin temperature and the outside temperature.
5 Reduce cabin temperature or fan speed.
6 Currently set fan speed (based on a bar chart, max. speed corresponds to a 100% filled bar).
7 Increase cabin temperature or fan speed.
8 Shift key between manual and automatic fan control.
9 Switching on the ECON mode.

Switching on the air conditioner / heater

➢ Switch on ignition or start engine.

After switching on the ignition, the software version is shown in the display (1) for 3 seconds.

The device then carries out a self-test, which takes a maximum of 20 seconds. The buttons are then enabled for operation.
The operating mode and display after switching on always correspond to the settings before the last switch-off.
When the engine stops, the fan speed is reduced after 10 minutes.
This prevents excessive discharge of the battery.

⚠ NOTE

If the cooling compartment is open, temperature errors may occur in the climate control system.

➢ Closethe cooling compartment flap again after opening.

Switching on the climate control system

In automatic operation, the air conditioning compressor, heating and ventilation are automatically controlled so that the specified cabin temperature is reached as quickly as possible and then kept constant.
This operating mode is ideal for high outdoor temperatures.

Activate climate control:

- Switch off REHEAT mode (3), manual fan control (8) and ECON mode (9). The function lights (3), (8) and (9) are off.
- The function light for automatic mode (2) lights up. Climate control is active.
- When outside temperatures are below 10 °C, the climate control system switches off the air-conditioning compressor.

Setting the cabin temperature

⚠ WARNING

If the outside temperature is very high, avoid too great a difference between the cabin temperature and the outside temperature.

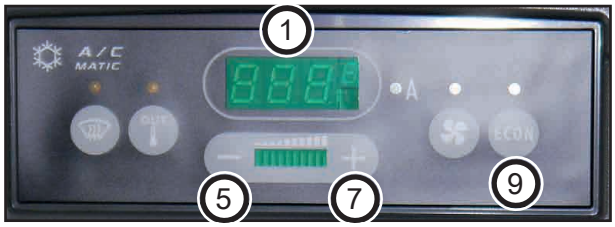

The display (1) shows the currently set temperature.

- The temperature can be reduced by pressing the Minus key (5).
- The temperature can be increased by pressing the Plus key (7).
- 1x pressing corresponds to 1 °C or 1 °F.

The climate control automatically regulates the cabin temperature to the set value. The fan speed is slowly increased so that the cabin temperature reaches the setpoint value more quickly. When the cabin temperature approaches the setpoint, the fan speed is reduced again.

In ECON mode (9), the temperature cannot be lowered but only increased. The fan speed can be changed manually.

Manual fan speed control

The fan speed can be controlled manually.

Activate fan setting:

- Switch on manual fan control (8). The function light (8) lights. Manual fan speed control is active.
- The bar diagram (6) shows the currently set fan speed. Maximum speed corresponds to a 100% filled bar.
- The fan speed can be reduced by pressing the Minus key (5).
- The fan speed can be increased by pressing the Plus key (7).
- 1x pressing corresponds to 10%.

The changed setting is saved and activated after 5 seconds.
By switching off the manual fan control (8), the fan speed is automatically controlled again.

Activate ECON mode

In ECON mode, the air conditioning compressor is switched off. The cooling of the cabin is switched off. Heating and, depending on the setting, ventilation are automatically controlled.

This operating mode should be used when the cooling function is not required.

Activate ECON operation:

- Switch on ECON mode (9). The function light (9) lights.
- The function light for automatic mode (2) goes off. The ECON mode is active and the cooling function is off.

Drying cabin windows with REHEAT mode

To dry the cabin windows, the compressor is permanently switched on at maximum fan speed. The heating is controlled to the adjusted set point.

Dry the cabin windows:

- Close the cabin doors.
- Switch on REHEAT mode (3). The function light (3) lights. REHEAT drying mode is active.
- The fan is set to maximum power.
- If necessary, change the fan speed; see *Adjusting the fan speed manually*.

Display outside temperature

Press the shift key (4) to display the cabin or outside temperature.
The function light (4) lights. The display (1) shows the outside temperature.

Change temperature unit

Press and hold the shift key (4) to display the cabin or outside temperature and the minus key (5) to reduce the cabin temperature or fan speed simultaneously for 3 seconds.
The temperature display is switched to the *°Fahrenheit* unit.
Repeat to reset the unit to *°Celsius* .

Adjusting the air flow of the air conditioner

The air flow in the cabin is distributed by the fan nozzles (a), (b) and (c) above, to the right and left of the windscreen.
Each fan nozzle can be manually opened, closed and adjusted in any direction.

To heat the footwell, adjust the fan nozzles as follows:

- Close adjustable fan nozzles (a).
- Close upper fan nozzles (b).
- Open lower fan nozzles (c) completely.
- Align the blades of the fan nozzles (c) with the footwell.

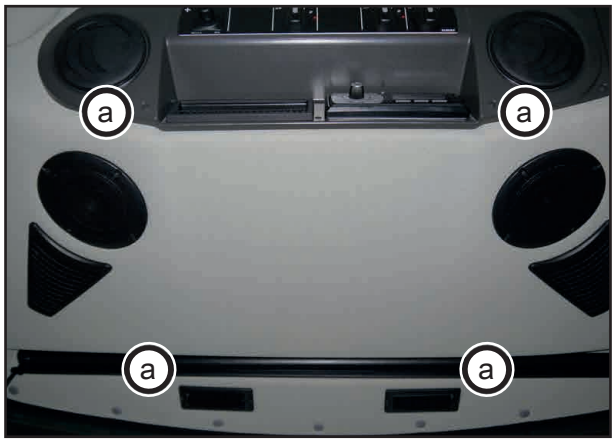

Fan nozzles in the roof console

Fan nozzles in the A-pillar

Malfunction and remedy Air conditioning system

DANGER

Incorrect handling of refrigerant may result in death or serious injury.

- If refrigerant penetrates the skin or eyes, have the injury treated immediately by a specialist.

WARNING

Incorrect handling of refrigerant may result in death or serious injury.

- Only have work on the air conditioning systems carried out by a qualified specialist workshop.
- Avoid any contact with refrigerant.
- Wear protective gloves and safety goggles.
- Do not weld on the parts of the refrigerant circuit and in their immediate vicinity.
- Maximum ambient temperature for refrigerant 80 °C [176 °F].

Fault	Cause, remedy
Air conditioning switches off automatically. The warning light on the control element of the air conditioner lights up.	• Enormously high outside temperature. ➢ Let the system cool down, then switch it on again. Close windows and doors.
Air conditioner doesn't cool. Only uncooled air comes out of the fan nozzles.	• Magnetic clutch does not engage. ➢ Have the coupling replaced. • Belt loose. ➢ Tension or replace belt. • Cable connections loose. ➢ Fasten interrupted cable connections. • Fuses defective. ➢ Replace fuse. • Compressor does not pump refrigerant, expansion valve is frozen. The moisture saturation of the filter drier is reached. ➢ Have the filter dryer replaced by qualified personnel.
Cooled air flows in from the fan nozzles in the cabin. However, it is not sufficient to cool the cabin sufficiently.	• Cabin air filter is soiled. ➢ Clean or replace cabin air filter. • Evaporator in cabin roof is soiled. ➢ Clean the evaporator. • Evaporator defective. ➢ Have the evaporator replaced by qualified personnel. • Condenser in front of the water cooler soiled. ➢ Clean the condenser. • Refrigerant level too low. White ball does not float, it is on the bottom. ➢ Have the air conditioning system checked by qualified personnel. • Outside air enters the cabin. ➢ Close windows and doors fully.
Air conditioning brings cool air at times, shortly thereafter warm air again.	• Ice formation in the expansion valve. • Filter dryer saturated. ➢ Have the filter dryer replaced by qualified personnel.
Compressor too loud	• Bearing of compressor damaged. ➢ Have the compressor replaced or repaired by qualified personnel. To do this, refrigerant must be sucked off and the system must be refilled. • Oil level in compressor too low. Recognizable by external leaks. ➢ Have the compressor repaired by qualified personnel.
Moisture in the cabin Water drips through the fan nozzles.	• Water drainage pipes blocked. ➢ Have the water drainage pipes repaired by qualified personnel.

Error code table

In case of a malfunction of the automatic air conditioning system the display will show an error code.

Error code	Fault	Cause, Remedy
F0	• A room temperature sensor error is indicated by the flashing display. • Switching outputs are switched off. • The control unit is no longer ready for operation.	• Check system for cable break or short-circuit, eliminate if necessary. • Check the correct connection of the temperature sensor and connect if necessary. • The cable of the temperature sensor is marked blue.
F1	• A blow-out temperature sensor error is indicated by the flashing display. • Switching outputs are switched off. • The control unit is no longer ready for operation.	• Check system for cable break or short-circuit, eliminate if necessary. • Check the correct connection of the temperature sensor and connect if necessary. • The cable of the temperature sensor is marked yellow.
F2	• An outside temperature sensor error is indicated by the flashing display. • The control unit is still ready for operation.	• Check system for cable break or short-circuit, eliminate if necessary. • Check the correct connection of the temperature sensor and connect if necessary. • The cable of the temperature sensor is marked red.

Starting operation of air conditioner

⚠ CAUTION

If the air conditioning system is used after a longer service life, damage to the compressor may occur.

- Before reuse, put the air conditioner into operation according to instructions.

To prevent compressor damage to the air conditioning system, operate the air conditioning system regularly.

- Switch on the diesel engine and let it run on idle.
- Open all fan nozzles.
- Open both doors.
- Switch on REHEAT mode (3) to dry the panes. The function light (3) lights. REHEAT drying mode is active. The fan is set to maximum power.
- Set the lowest temperature using the Minus key (5).
- Run machine 5 - 10 minutes in idle speed.

The air conditioner can now be operated again as usual.

Operating terminal

Spraying operation and the vehicle settings are controlled via the terminal in the cabin.
The graphic user interface shows and controls current settings and measuring values of the spraying operation. In addition, vehicle settings can be made and data for road/field operation can be monitored.

- Input and monitoring of data in spraying operation
- Input and monitoring of vehicle data in road and field operation

The ISOBUS-compatible *Topcon X35* or *Touch 1200* terminal is used on the machine.

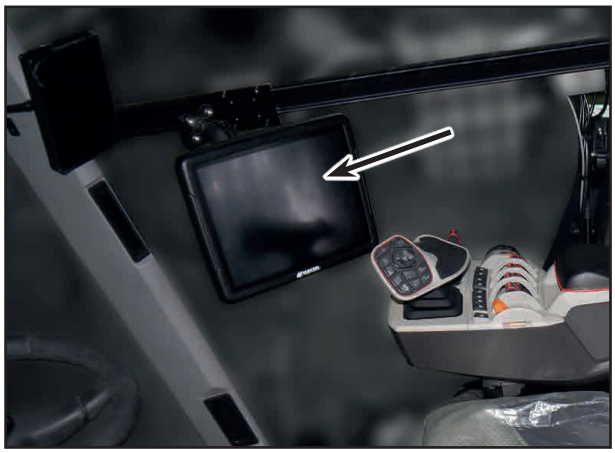

Other ISOBUS compatible terminals may alternatively also be used. However, this should be discussed with the HORSCH Service before use.

NOTE

- Instructions for operating the terminal are included in the supplied operating instructions!
- Instructions for operating the sprayer software are included in the supplied terminal operating instructions from HORSCH.
- When using an alternative terminal the respective operating instructions issued by the manufacturer must be followed!

Machine terminal

Current values of the vehicle for road or field operation are displayed on the machine terminal. Settings for the vehicle can only be made via the operating terminal.

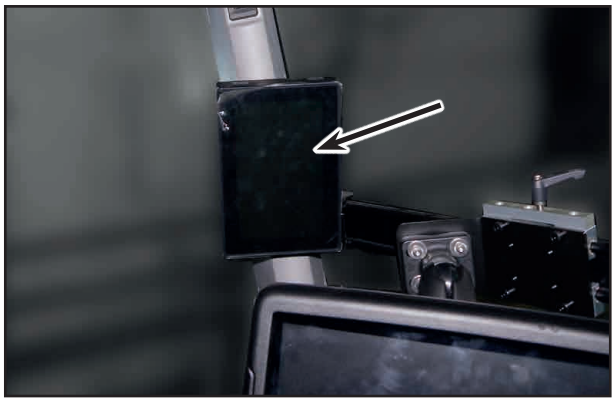

Ignition lock

For starting and stopping the engine of the machine.

1 Switch off the ignition / shut-off the diesel engine
2 Switch on ignition
3 Start diesel engine

Foot pedal

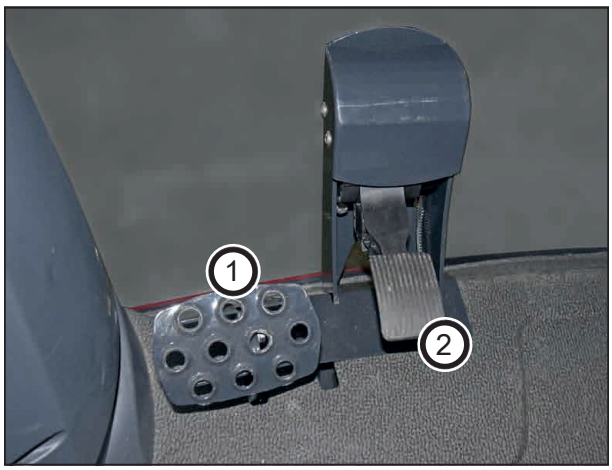

1 Foot brake pedal

2 Foot pedal

Pressing the switch foot brake pedal (1) brakes the machine.

Pressing the foot pedal (2) sets the machine in motion and accelerates it.

Emergency exit

On the right side of the cabin is the emergency exit of the machine. The door for it can be opened completely or only a gap.

Open door completely

➢ Pull the lever forward and push the window open. The window can be opened completely.

NOTE

The emergency exit cannot be operated if the machine is equipped with the External Filling Connection 3 options at the front right next to the cabin. In this case, an emergency hammer is provided in the cabin that can be used to smash the side window, if necessary.

Emergency hammer

Open door a gap

➢ Swing the lever up.
The window opens a crack. This position can also be used to ventilate the cabin.

Sun visor

In the event of incoming sunlight, undesirable reflections may occur in the window panes. To avoid this, the sun visors can be used.

➢ Hold the sun visor in the middle and pull down as far as necessary.

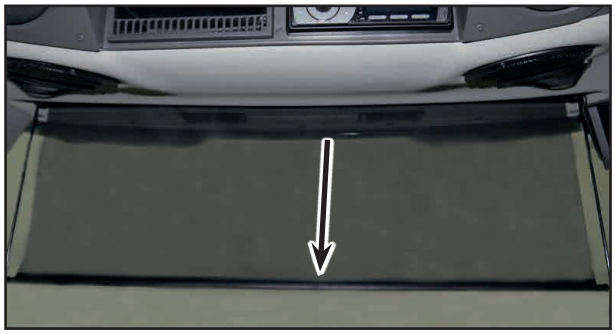

Pull the sun visor downwards as far as necessary

➢ Pull the cord to open the sun visor again. Hold on to the sun visor.

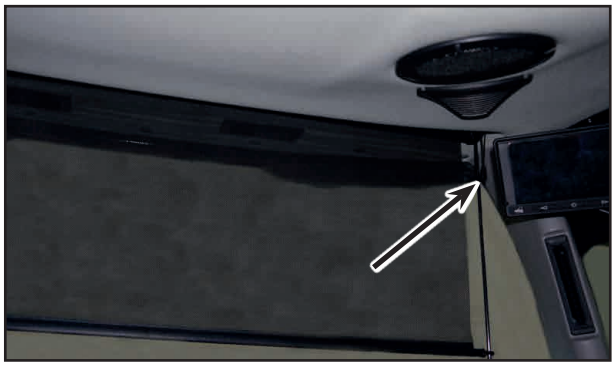

Pull the cord to loosen the sun visor

⚠ CAUTION

If the spring mechanism is damaged, the sun visors can no longer be opened.

➢ If necessary, support the upward movement of the roller blinds by hand, but do not brake them.

Cabin lighting and reading lamp

The cabin lighting and reading lamp are located on the right side of the roof covering inside the cabin.

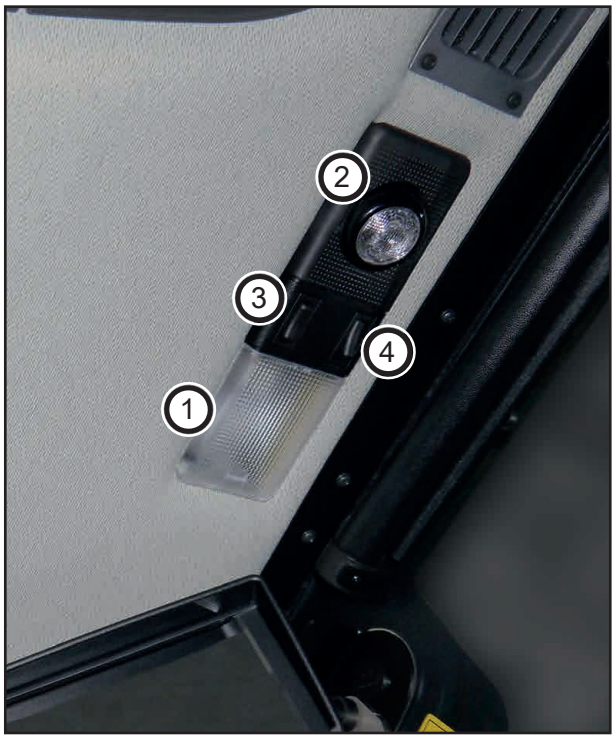

The cabin lighting (1) is switched on and off via the switch (3). The lighting can also be switched on and off when the door is opened. When closing the door, the light will stay on for another few seconds.

The movable reading lamp (2) is switched on and off via the switch (4).

Cooling box

The cooling box is located below the instructor's seat.

➢ Switch the cooler on and off with the switch.

Storage compartment with integrated cooling function under the seat area of the instructor's seat.

Storage compartment

There is a document storage compartment under the driver's seat and in the roof console. The lid can be opened by pressing and pulling the snap fastener.

Storage compartment under the driver's seat

Storage compartment in the roof console

NOTE

Do not store any pointed, heavy objects on the floor of the cabin as they may cause the doors or front window to burst.
Do not store any crop protection agent in the cabin.

Camera system

The camera display is located in the cabin on the right side above the machine terminal.

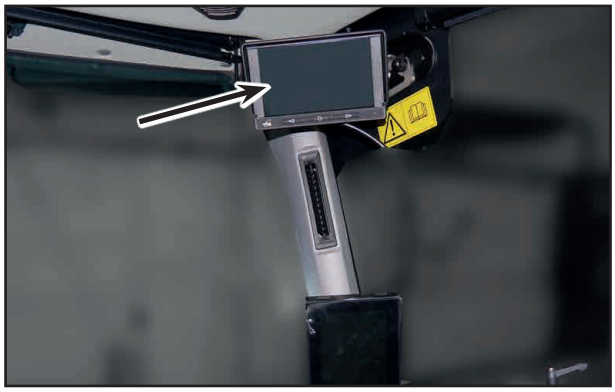

Monitor for cameras in the cabin on the right

⚠ WARNING

Do not only use the camera display for manoeuvring! Persons or objects can be overlooked! This may cause severe or even fatal injuries.

- ➢ The camera system is an auxiliary tool. It does not replace the attention of the operator for the immediate environment. Use additional means such as mirrors to maintain a complete view of the areas relevant for safety.
- ➢ Before manoeuvring, ensure with a direct view that there are no persons or objects in the manoeuvring area!
- ➢ The camera inputs carry voltage. No moisture or other metallic objects may enter it.
- ➢ No other use of the camera monitor system while driving.

⚠ NOTE

Do not open the monitor housing since the function is otherwise no longer ensured. Maintenance and assembly work may only be carried out by qualified personnel.

The machine can optionally be equipped with three cameras. Switching between the rear view camera, the camera for wheelbase monitoring or the camera for spray cone monitoring is possible.

Overview

1 Main menu
2 Selection button
3 Left arrow button
4 Right arrow button

Button function with menu deactivated:

- Manual selection of view with the arrow buttons
- Display menu: Briefly press selection button
- Monitor OFF: Press selection button prolonged (3 seconds)
- Monitor ON: Press selection button

Button function with menu activated:

- Navigation with the arrow buttons, selection of a menu item with the selection button
- Change menu items with the arrow buttons, accept values/confirm with the selection button and related return to the next higher menu level

NOTE

The views are primarily activated via the trigger inputs (vehicle signals), where the assignments of triggers and views as well as their priorities are defined in the respective menus. This automatic activation can be bypassed manually at any time, but only until the trigger is activated again. If no trigger is active, the view last selected manually is displayed again. This selection is only cleared again by restarting the device.

Main menu

Display

In the *Display* menu, individual settings can be made for each camera.

- Brightness: Adjusting the brightness, numeric value from 0-99
- Contrast: Adjusting the contrast, numeric value from 0-99
- Colour: Adjusting the colour tone, numeric value from 0-99
- NTSC Tint: Colour corrections (only for NTSC cameras)

Cameras

In the *Camera* menu, an individual name can be assigned to each camera. It is shown on the image when the respective camera is activated. In addition, the camera image can be mirrored and markings can be shown on the camera image. The position of the markings can be adjusted horizontally and/or vertically and their spacing can be changed.

- Name: camera name can be freely defined, e.g. Front
- Mirroring: determines for all views whether the camera is mirrored or not
- Marking: Showing and positioning of markings in the form of two lines, arranged as travel corridor.

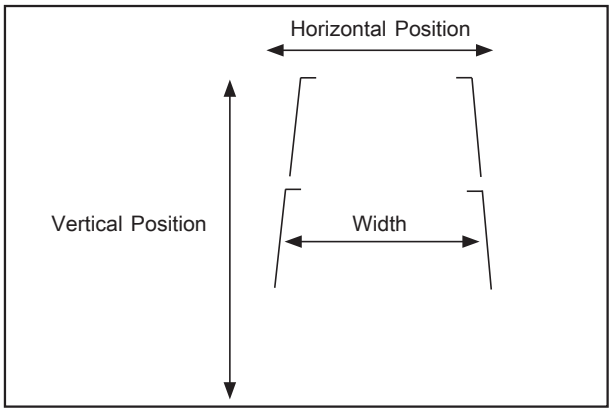

Views / Split and PIP arrangement

The *Split and PIP Arrangement* menu allows determining how the cameras are split and displayed on the monitor.

- Split: Configuration of the multiple views
- PIP arrangement: Selection of the cameras

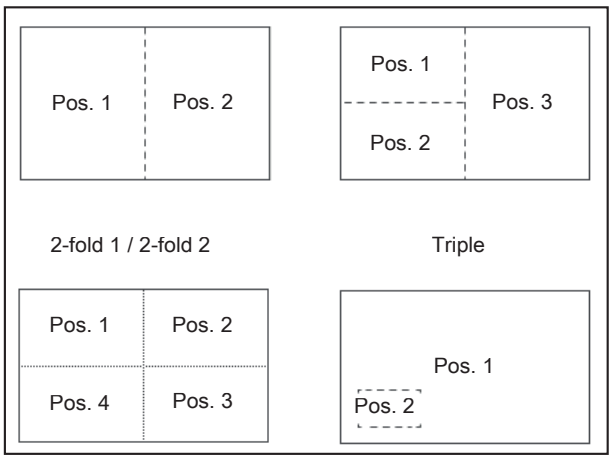

Views / Triggers and Priorities

The *Trigger and Priorities* menu allows determining which split display shall be activated with a trigger.

- Trigger: Activation condition
- Priorities: Ranking of the views

System / Load Settings

The *Load Settings* menu allows loading various predefined and stored settings:

- Factory setting: Resets the monitor to the factory setting
- User-defined: Reset the monitor to the setting saved by the user

System / Night Settings
The *Night Settings* menu allows adjusting the values for dimming at night.

- Brightness: Determines to which value the display shall be dimmed at night (the lower the darker)
- Limit: Determines at which ambient brightness the monitor switches from day to night mode. If the limit is set to low, the monitor switches between day and night mode at low ambient brightness. The monitor is always in day mode when setting the limit to 0. The monitor is always in night mode when setting the limit to 99.

Trigger Input Setup
In The *Trigger Input Setup* menu the trigger inputs are adjusted to the connected vehicle signals.

- active high: the assigned view is activated when voltage is applied to the trigger input
- active low: the assigned view is activated when no voltage is applied to the trigger input

Rear view camera (optional)

The rear view camera is located on the middle section of the folding boom. The rear view camera starts automatically when driving backwards.

Rear view camera in folding boom middle section

Wheel camera (optional)

The wheel camera helps entering the track. The camera is located on the fender of the right front wheel, with view onto the field entry.

Wheel camera on the right front wheel fender

Nozzle camera (optional)

The nozzle camera is used to monitor the spraying cones. The camera is located on the bracket for Night Light cleaning.

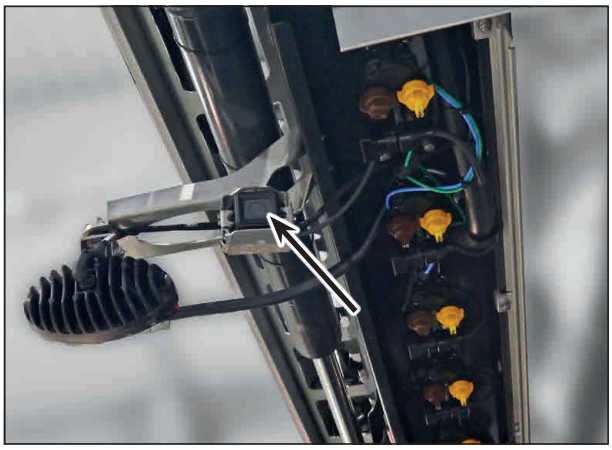

Nozzle monitoring camera

Outside mirror

➢ The outside mirrors can be heated.

Left hand outside mirror and start-up mirror

Right hand outside mirror and start-up mirror

Mirror adjustment

Both outside mirrors can be electrically controlled. The switch is located in the roof console.

Switch for adjusting the outside mirrors

➢ Turn switch to left or right to select the side of the outside mirror.

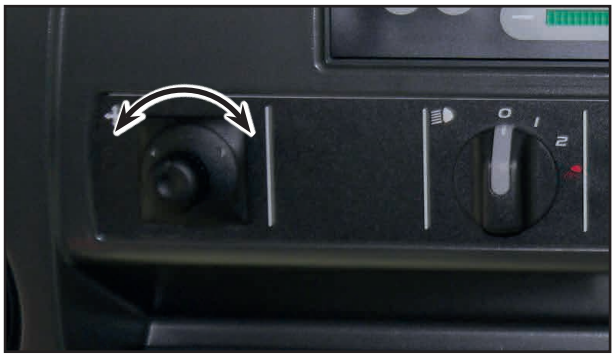

➢ Turn the switch up, down and to the side until the outside mirror is optimally adjusted:

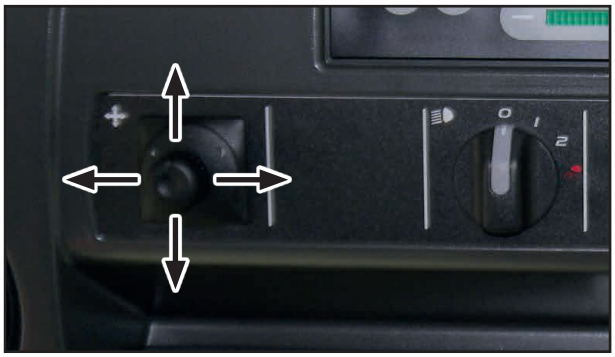

⚠ NOTE

Check the position of the mirror before starting to travel and readjust if necessary.

⚠ NOTE

Adjust both drive off mirrors so, that the ground area next to the right or left front wheel can be checked before driving off.

Sockets

Cabin sockets

Three 12 V sockets (1 and 2) are located in the cabin to the right behind the driver's seat, below the ignition lock.

Cabin sockets

Two optional USB ports (3) with the outputs DC 5 V 2.1 A and DC 5 V 1.0 A are installed.

USB ports (optional)

Electrical vehicle socket outlets

The vehicle socket outlets are located on the right side of the cabin under the multi-function control panel. To do this, open the lid of the central electrical system.

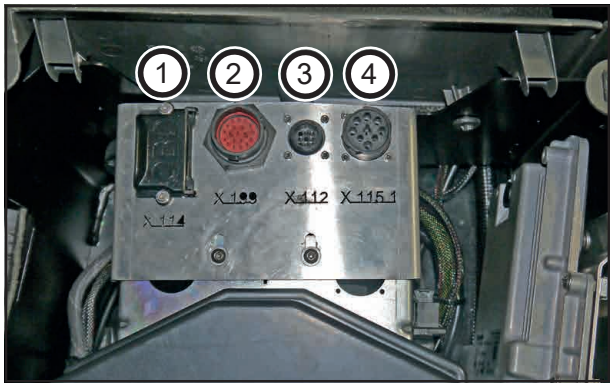

Vehicle socket outlets (the figure shows emission standard stage 5, machines with emission standard 3a have a different vehicle socket for engine diagnostics (4))

1 Vehicle socket outlet for engine OBD diagnostics
2 Vehicle socket outlet for vehicle diagnostics
3 InCabin Connect - CAN1 ISOBUS
4 Vehicle socket outlet for engine diagnostics

NOTE

Do not damage socket outlets by trying to plug in unsuitable plugs!

The cigarette lighter is located on the right rear side of the cabin.

Cigarette lighter

The socket of the cigarette lighter can be used to connect other consumers with a rating of 12 Volt and max. 15 A. This discharges the battery when the engine is stopped. When using optional appliances use the specified plug.

Connected electric accessories must comply with DIN VDE 40 839 with respect to electromagnetic compatibility.

Battery main switch

1 Battery main switch (green)

2 Switch off power supply early (red)

The green battery main switch (1) must be operated each time the machine is started to turn on the current supply. The switch always deactivates automatically 15 minutes after the ignition switches off.

The red switch (2) is used to shut off the current supply early. The battery is disconnected from the vehicle electrical system without overrun time. The diesel engine shuts itself off. The exhaust gas treatment (optional) keeps running for another 15 minutes until final shut-down.

NOTE

When performing maintenance work on the vehicle electrical system or the battery, the vehicle electrical system must be de-energized by detaching the battery pole!

Central electrical system, top

The fuses on the circuit board are located under the covering in the upper left corner of the cabin.

- Switch off and secure the machine.
- Open the covering of the central electrical system.
- Remove the covering.
- The central electrical system is now freely accessible.

- Then reinsert the lid and lock it.

No.	Amperage	Function
F001	15 A	Not used
F002	15 A	Not used
F003	7.5 A	Instrument lighting
F004	7.5 A	Side light left
F005	7.5 A	Side light right
F006	15 A	Not used

No.	Amperage	Function
F007	15 A	Brake light
F008	10 A	Not used
F009	15 A	Vehicle lighting control
F010	15 A	Not used
F011	15 A	Not used
F012	15 A	Not used
F013	15 A	Not used
F014	15 A	Additional driving light
F015	15 A	Dimmed headlight right
F016	15 A	Dimmed headlight left
F017	15 A	High beam left
F018	15 A	High beam right
F019	20 A	Not used
F020	20 A	Not used
F021	20 A	Not used
F022	15 A	Not used
F023	20 A	Not used
F024	20 A	Not used
F025	20 A	Not used
F026	20 A	Not used
F027	10 A	Not used
F028	30 A	Not used
F029	10 A	Not used
F030	20 A	Rotating beacon relay output
F031	3 A	Not used
F032	10 A	Not used
F033	10 A	Not used
F034	7.5 A	Not used
F035	15 A	Not used
F036	15 A	Radio 30
F037	15 A	Not used
X49		Fuse test
K001		Relay high beam
K002		Not used
K003		Not used
K004		Not used

No.	Amperage	Function
K005		Not used
K006		Not used
K007		Not used
K008		Not used
K009		Not used
K010		Not used
K011		Relay rotating beacon
K012		Relay brake light
K013		Not used
K014		Relay driving light
K015 D		Not used
K015 DD		Relay ignition
K016		Not used
K017		Not used
K047		Not used
K048		Flasher relay Europe

Central Electrics (CE) Machine

The fuses on the circuit board are located under the covering to the right of the driver's seat in the cabin.

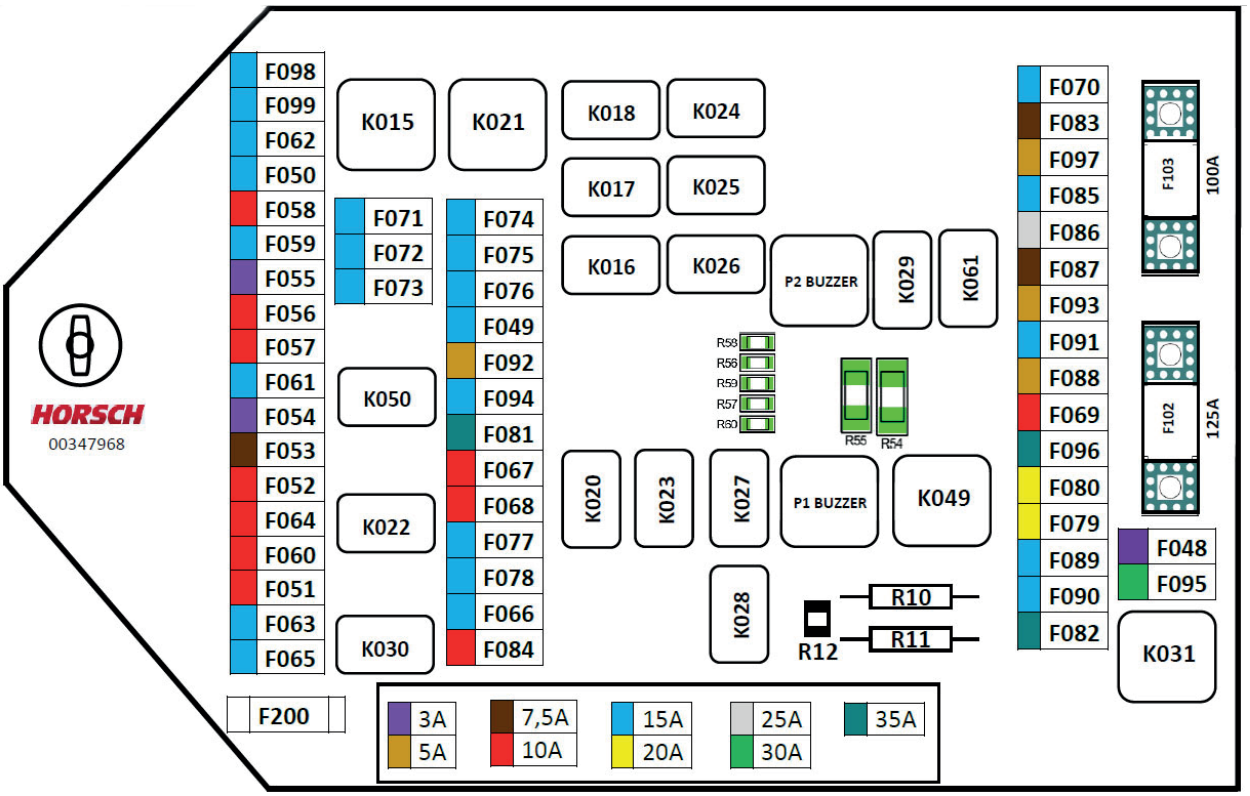

No.	Amperage	Function
F048	3 A	Terminal 30X time relay main battery switch (BHS)
F049	15 A	Mirror heating supply
F050	15 A	Parking brake system supply (FBA)
F051	10 A	Machine terminal supply terminal 15
F052	10 A	ISOBUS terminal supply terminal 15
F053	7.5 A	Terminal 15 supply ESX-3XM (HECU)
F054	3 A	Terminal 15 supply RC20-10/30 Master/Slave
F055	3 A	Supply charging indicator light; rotary encoder steering wheel
F056	10 A	Engine control unit supply terminal 15

No.	Amperage	Function
F057	10 A	Armrest supply terminal 15
F058	10 A	Cool box supply
F059	15 A	Driver seat supply
F060	10 A	Roof switch supply
F061	15 A	ISOBUS ECU-PWR supply
F062	15 A	GPS-set-up supply terminal 15
F063	15 A	Supply PVED-CL
F064	10 A	Cabin outlets supply
F065	15 A	Reserve terminal. 15
F066	15 A	Reserve terminal. 30
F067	10 A	Machine terminal supply terminal 30
F068	10 A	ISOBUS terminal supply terminal 30
F069	10 A	Armrest supply terminal 30
F070	15 A	GPS-set-up supply terminal 30

No.	Amperage	Function
F071	15 A	GPS-set-up supply terminal 61R/Field mode
F072	15 A	Reserve terminal 61R/Field mode
F073	15 A	61R/Field mode on CE roof supply
F074	15 A	Trackfinder left supply
F075	15 A	Trackfinder right supply
F076	15 A	Rear working headlights supply
F077	15 A	Reversing light supply
F078	15 A	Reserve terminal. 30
F079	20 A	Engine sensors supply AGN (via K049)
F080	20 A	Engine exhaust flap supply (via K049)
F081	35 A	Performance supply RC20-10/30 Master (travel drive)
F082	35 A	Hydraulic height adjustment supply (optional)
F083	7.5 A	Relay amplification supply D+/61 terminal 30
F084	10 A	Relay LS-release Start supply
F085	15 A	Cigarette lighter/ cabin socket supply
F086	25 A	Cabin socket supply
F087	7.5 A	Ignition start switch supply ZSS terminal 30
F088	5 A	Supply UE+ ESX-3XM (HECU)
F089	15 A	Performance supply +UB1 ESX-3XM (HECU)
F090	15 A	Performance supply +UB2 ESX-3XM (HECU)
F091	15 A	Performance supply +UB3 ESX-3XM (HECU)
F092	5 A	Electronics supply RC20-10/30 Master (travel drive)
F093	5 A	Electronics supply RC10-10/30 Slave (suspension)
F094	15 A	Start relay 5050 supply
F095	30 A	Engine control unit supply terminal 30
F096	35 A	Relay supply ATS K049 (exhaust gas treatment)
F097	5 A	Diagnostics plug supply FPT terminal 30
F098	15 A	Forced ventilation supply terminal 15

No.	Amperage	Function
F099	15 A	Daytime running light supply
F102	125 A	Main line supply CE roof
F103	100 A	Back-up fuse terminal 30 CE bottom
F200		Jumper for dimmed headlight diode
K015		Ignition terminal. 15R
K016		Engaging the parking brake relay (FBA)
K017		Parking brake relay (FBA) self-holding
K018		Parking brake relay (FBA) solenoid valve
K020		LS relief relay Start
K021		Relay field/road
K022		Start interlock relay
K023		Relay reversing light
K024		Trackfinder left relay
K025		Trackfinder right relay
K026		Working head lights rear
K027		Relay Reserve 2
K028		Relay Reserve 2
K029		Daytime running light relay
K030		Mirror heating relay
K031		Time relay with drop-off delay main battery switch (BHS)
K049		ATS relay (sensor supply EDC)
K050		Starting relay
K061		Relay Gain D+
P1 Buzzer		Beeper HECU error
P2 Buzzer		Light warning feature
R10		Back-up resistor intake air grille heating
R11		Back-up resistor fuel heating
R12		Replacement resistor engine warning lamp
R54, 55		Pull down resistors direction indicators
R56, 57, 58		Pull down resistors forced ventilation settings 1, 2, 3
R59, 60		Pull down reserve resistors

Electrics battery compartment

The fuses for the battery compartment are located behind the cabin under the covering.

ISOBUS disconnect relay

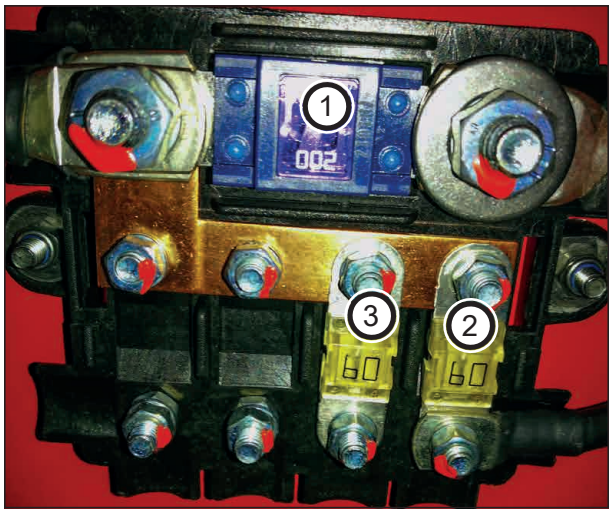

No.	Amperage	Function
1	200 A	Cabin fuse
2	60 A	ISOBUS fuse
3	60 A	Reserve

Optional electrics

Pulse width modulation (optional)

The fuses for the pulse width modulation (PrecisionSpray) are located in the middle section of the folding boom under the black coverings.

- ➢ If several nozzles fail at the same time, check the function of fuses and relays and replace them as necessary.

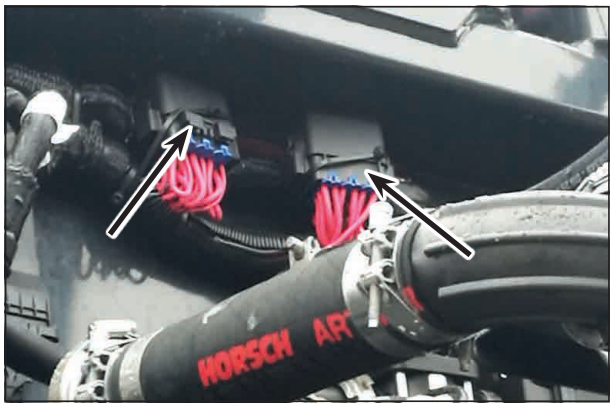

Position of pulse width modulation fuses

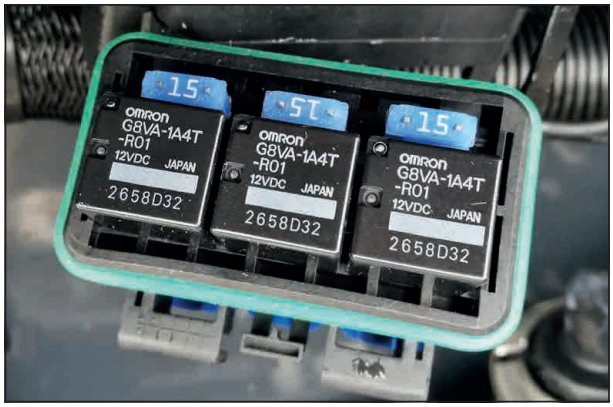

Fuses and relays of PWM nozzles/PrecisionSpray folding boom middle section power supply

Main fuse PWM nozzles/control unit PrecisionSpray power supply, optional (battery compartment)

⚠ NOTE

The blue button (2) allows tripping the fuse manually if necessary.
When the main fuse has tripped, it can be reset by pressing the yellow tripping mechanism (1) back.

Circulating air filter

⚠ NOTE

Replace the air recirculation filters every 3600 h.

On the right side in the roof console there is a large circulating air filter.

Two additional air recirculation filters are located on the right and left of the roof console above the driver's seat.

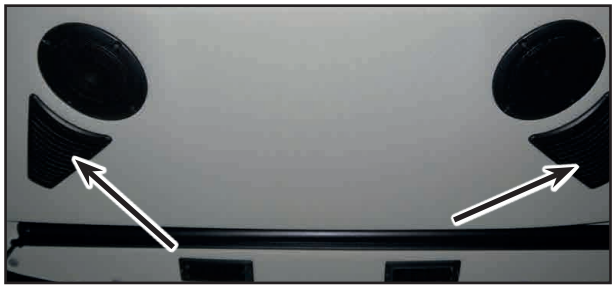

- Remove the air recirculation grille.
- Suck-off, tap or blow out soiled filters on the surface with compressed air.
- Replace damaged filters.
- Reinstall air recirculation grille.

Fresh air filter category 2

⚠ NOTE

The activated-carbon filter must be replaced every 3 months, regardless of the operating hours. The pocket filter must be replaced every 6 months.

⚠ WARNING

Any maintenance work on the filter system must only be carried out with the engine shut down. Pay attention to possibly contaminated dust in the filter. Do not inhale it and avoid skin contact. Do not blow out or suction out the filter. Dispose of filter dusts properly.

An activated-carbon filter is located on the left side of the machine in the upper outside area of the cabin. This filter protects the vehicle driver inside the cabin against dust and suspended contaminants outside the cabin.

Activated-carbon filter position

Commissioning

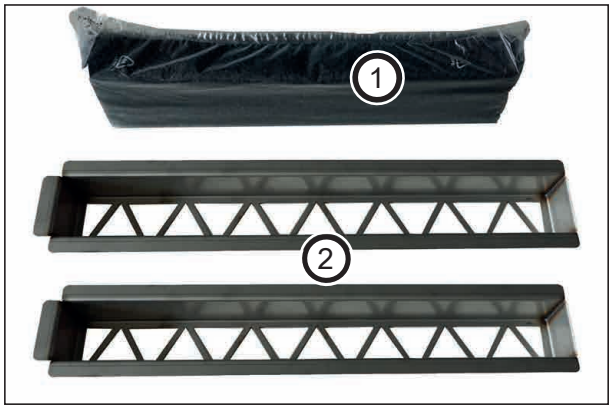

1 Activated carbon plates

2 Activated carbon grilles

The activated carbon plates are shipped packaged. Unpack only shortly before installation!

- Open the covering on the cabin roof at the left. If necessary, the covering is secured with a transport screw. This It must be removed the first time it is opened and is not required for normal use.
- Remove the pocket filters.
- Insert two activated carbon plates each in a filter grille.

- Introduce the grilles with the activated-carbon filters into the pocket filters.

- Attach the pocket filters with the activated-carbon filters again.
- Close the covering.

Activated-carbon filter with pocket filter

⚠ WARNING

If the air filter is incorrectly installed or defective, dust and fine dust from the placed crop protection agent will enter the cabin. These are inhaled and cause damage to health.

- Make sure the filter is tightly seated.
- Replace defective air filter immediately.

- Open the covering to clean, replace or check.
- Unlock and remove the filter.
- Suck-off, tap or blow out soiled filters on the surface with compressed air.
- Damaged filters and sealing profiles must be replaced.
- Insert the filter.
- Close the covering again.

NOTE

In case of inadequate maintenance, the filter will become extremely contaminated and must be changed.

Clean / change air filter

Carry out checks and filter changes only outside the contaminated area and with the ignition deactivated. Wear gloves.

- Disconnect the central plug from the housing to interrupt the power supply.
- After removing the used filters, clean the housing with a damp cloth.
- Check housing and seals for damage.
- Insert new filters.
- Ensure that the inserted filter is securely seated to ensure complete sealing.
- Ensure that the housing cover is securely seated.
- Make sure that the order of the filter elements is observed.
- After changing the filters, operate the cabin air filters at the lowest setting.

Cabin air filters category 4 (optional)

NOTE

Standard air filtering category 2 is obsolete if the machine is equipped with the option cabin air filtering category 4. Instead of the pocket filters and activated-carbon filters, closing coverings are installed on the cabin roof.

The filter system serves to protect the operator in the cabin from air pollution. The ambient air is cleaned by one or more filter stages and freed from dust, aerosols or gases. The filter system has an integrated fan which transports the filtered fresh air into the cabin. At the same time, a certain overpressure is generated in the cabin.

The filter system can optionally be mounted as category 3 (without activated-carbon filter) or category 4 (with activated-carbon filter). If the filtration is to pass as category 3 only, the activated-carbon filter must be removed and the empty frame installed.

WARNING

Any maintenance work on the filter system must only be carried out with the engine shut down. Pay attention to possibly contaminated dust in the filter. Do not inhale it and avoid skin contact. Do not blow out or suction out the filter. Dispose of filter dusts properly.

CAUTION

Safety risk from wrong spare parts!
Wrong spare parts may affect the safety and function of the filter system and cause damages.

- Check the spare parts before installation
- Use only original spare parts of the manufacturer

NOTE

To generate adequate overpressure in the cabin, the default ventilation must also be activated when selecting Cat 4 filtering! The fan speed of the default ventilation must be increased in the event of inadequate cabin overpressure. Refer to the section *Air conditioning / Heater*.

Overview

The arrow indicates the flow direction.

1 Activated-carbon filter
2 Aerosol filter
3 Dust filter
4 Empty frame

The arrow indicates the flow direction

Activated-carbon filter (shipped packaged, unpack before installation!)

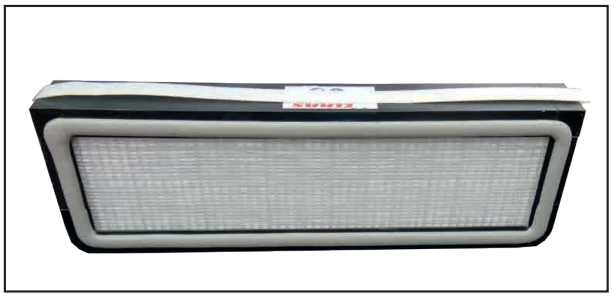

Aerosol filters

Dust filter

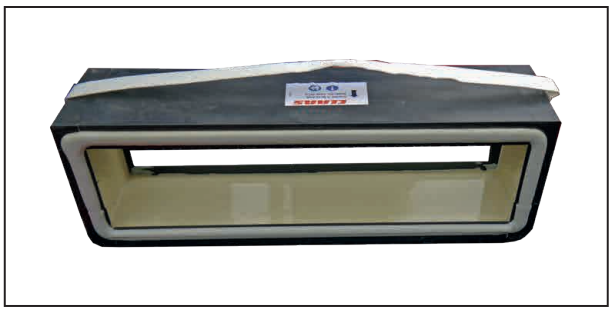

Empty frame

Maintenance

NOTE

The activated-carbon filter must be replaced every 3 months, regardless of the operating hours.
The dust filter and aerosol filter must be replaced after 6 months.

Clean filter system

- Do not use high-pressure cleaners to clean the inside of the filter box to prevent damage to the filter elements, fan and electronic components.
- Do not use high pressure cleaners to clean areas with stickers on them.

Perform visual check of the filter system

- Check air ducts for leaks and damages.
- Check cable routing for chafing.
- Repair any damages to the paint coat or any corrosion that has been detected professionally.
- Deactivate the filter system if damages such as cracks can be detected and contact the sales partner.

Replace the filter

- Make sure that the machine is outside the contaminated area.
- Switch off the ignition.
- Clean the filter box.
- Release the catch (3) of the plug (1).
- Pull off the plug (1) from the filter box (2) to interrupt the power supply.

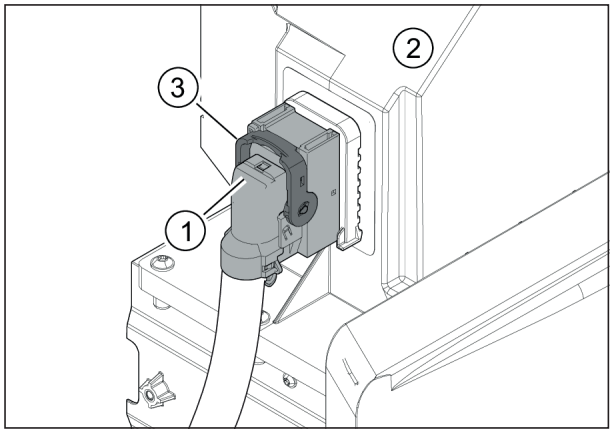

Remove the filter

- Unlock the snap locks (1) and open the lid (2) of the filter box.

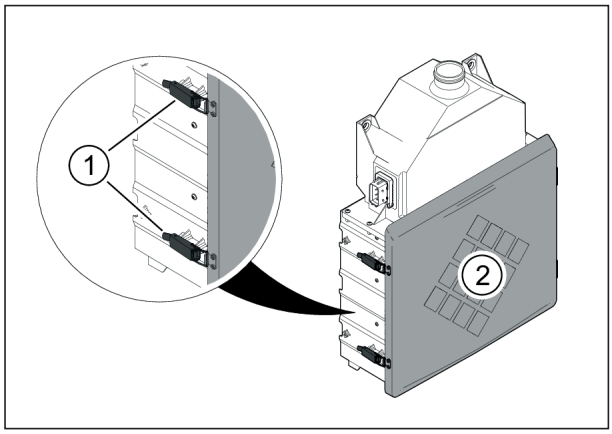

- Depending on the maintenance interval, remove the filter in the order dust filter (3) aerosol filter (2), activated-carbon filter (1).
- Clean the housing with a moist cloth.
- Check housing and seals for damage.

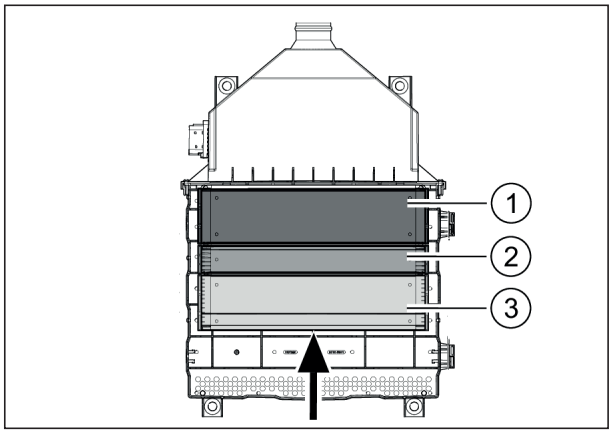

Install the filter

⚠ WARNING

Entry of toxic substances into the cabin due to fitting the filter box with wrong inserts. Risk of poisoning!

- Make sure that the inserts fitted into the filter box meet the cabin category on the identification.
- Adapt the identification of the cabin category when modifying the filter system.

- Insert new filters in the activated-carbon filter (1) aerosol filter (2), dust filter (3). Make sure the seal of the filters points upward.
- Ensure that the filters are seated securely.

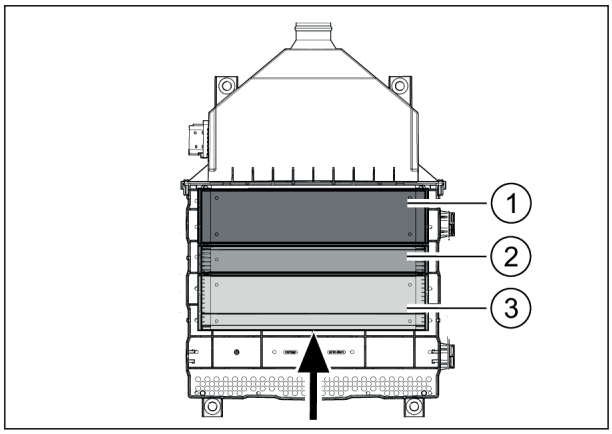

- Close the lid (2) of the filter box and lock the snap locks (1).

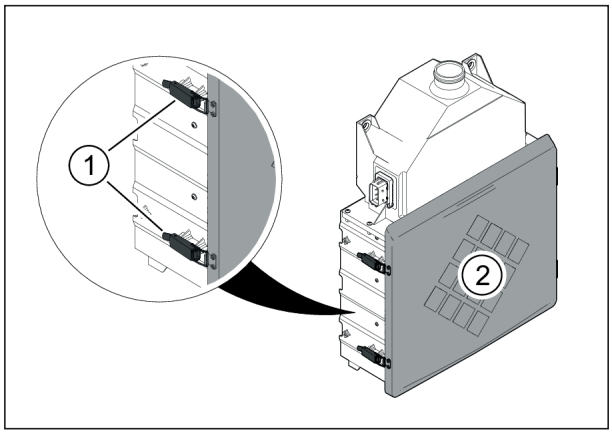

- Connect the supply plug (1) to the filter box (2).
- Close the catch (3) of the plug.

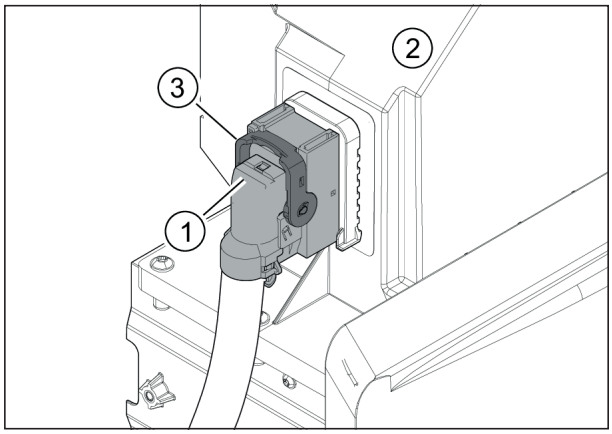

- After having changed the filters, operate the cabin ventilation on the lowest fan setting.

Decommissioning and disposal

Once the product or its components reach the end of their useful life, the components must be disposed of properly. The regulations of the responsible local authorities must be observed.

The operating materials and contaminated filters require special disposal and must not be released into the environment. Further information regarding disposal can be obtained from the responsible local authority, the qualified specialist workshop or the sales partner.

- Do not dispose of products with the symbol (1) in household waste at the end of their useful life.

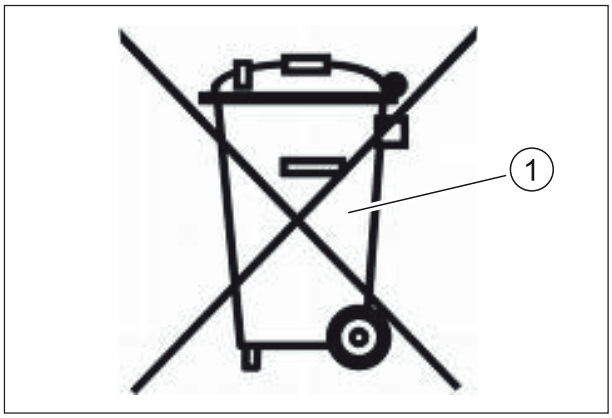

- Recycle used materials with the symbol (2) according to their identification.

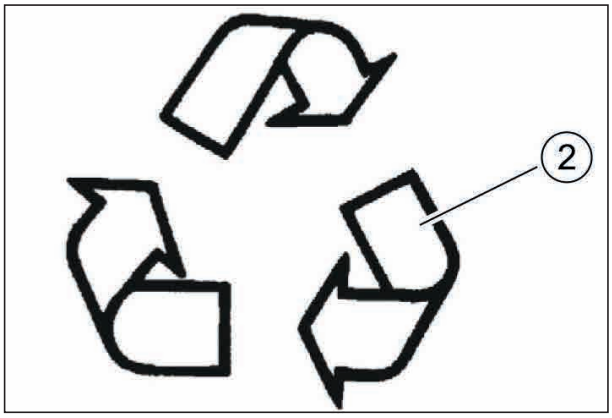

- Recycle and reuse packaging materials and do not throw away with household waste.
- Recycle, reuse and dispose of plastics marked with the material designation, such as PP TV 20, and do not throw them in the household waste.
- Sort and recycle used metals according to type, recycle them and do not throw them in the household waste.
- Dispose of electrical and electronic components properly or hand them in at a collection point. Do not throw electrical and electronic components in the household waste.
- After using the filter elements with pesticides or similar agents, refer to the safety data sheets and disposal regulations of the respective manufacturers.
- Observe the regulations of the responsible local authorities.

Pressure monitoring

A system for pressure monitoring is installed in the cabin.

If the inside cabin pressure drops below the pressure required for cabin filtering category 4, a warning message is displayed on the machine terminal.

Pressure monitoring is controlled on the machine terminal:

- Select *Cabin Filter Cat. 4 Settings* in the *Vehicle Settings* submenu.
- The internal cabin pressure can be set automatically or manually.

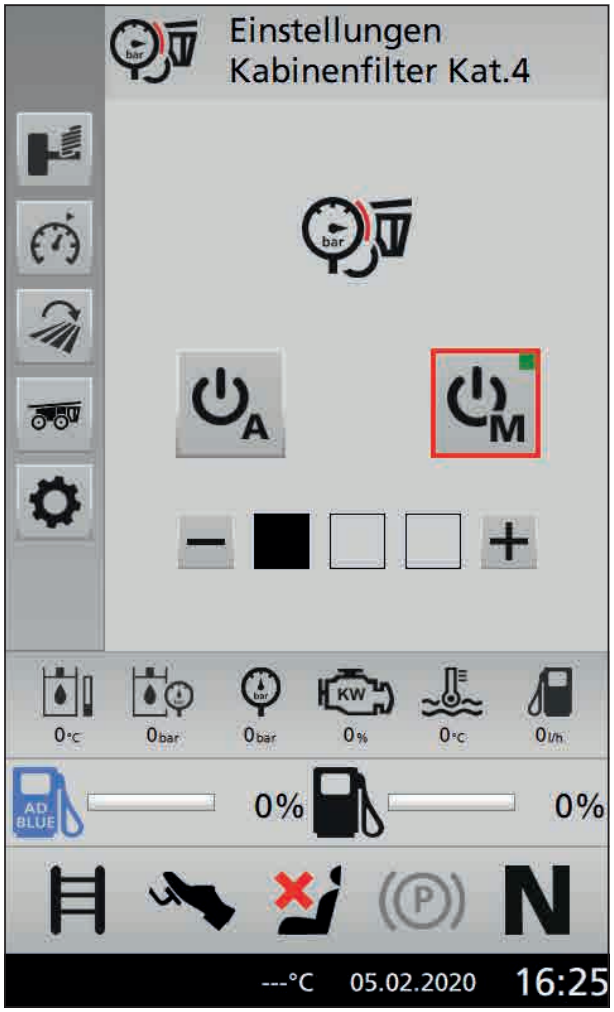

Cabin Filter Category 4 Settings

Radio

The radio is installed in the centre of the roof console.

Overview

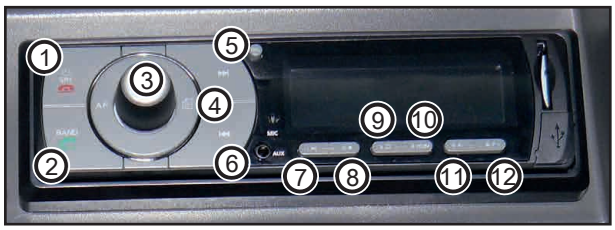

1 Switch on/off / Select source / Reject or end calls
2 Select radio frequency range / answering calls
3 Volume knob
4 Open the software menu
5 next radio station /audio track / fast forward
6 previous radio station/audio track/rewind
7 Play/Pause media files
8 Stop with media files
9 Repeat for media files
10 Shuffle media files
11 navigate to the previous folder for media files
12 navigate to the next folder for media files
7 - 12 stored stations in radio mode

On / Off

Briefly press the power button to turn on the unit. Press and hold the power button for one second to turn it off.

Multi-mode buttons

In radio mode, stations can be stored here. In media mode (USB or SD card), playback can be controlled here.

Volume knob

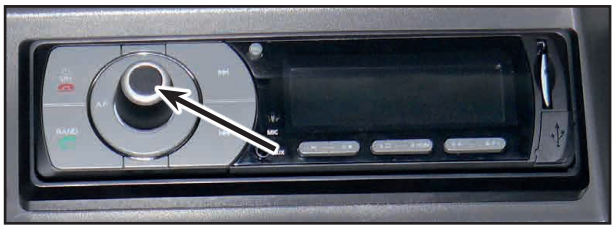

Turn the knob to adjust the volume.
Pressing the volume button briefly accesses the audio menu items *Balance*, *Fader*, *Bass* and *Treble* .
In the menu, the volume knob is used to navigate to the individual points.

Station scan

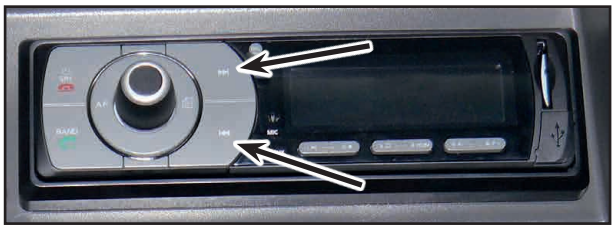

Use the arrow keys to search for radio stations. Short pressing automatically searches for the next available frequency.
Press and hold the button to start the manual station search.
The radio will return to automatic station scanning if no button is pressed for 3 seconds.

Save radio station

Press and hold one of the preset buttons to store the currently set station. A stored station can be called up by briefly pressing one of the keys. A stored station can be overwritten at any time by setting another station.

The Radio Data System (RDS) is available for many stations. RDS functions such as *AF (Alternative Frequency)*, *TP (Traffic Program)* or *TA (Traffic Announcement)* can be activated or deactivated. RDS is only available in the FM frequency range.

Playing media files

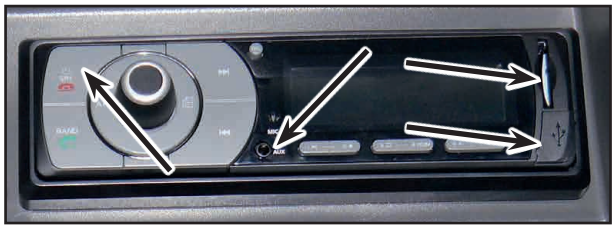

Music files on a USB stick or SD card can be played by connecting them to the appropriate slot on the device. If data carriers are connected, they are automatically played back. Use the *SRC button* to select *Radio*, *Media* or *AUX*. If media is connected to both slots, the last slot played is played back.

Use the *left* and *right* arrow keys to scroll through the individual music files. The *F+* and *F-* keys can be used to jump to the previous or next folder.

Software menu

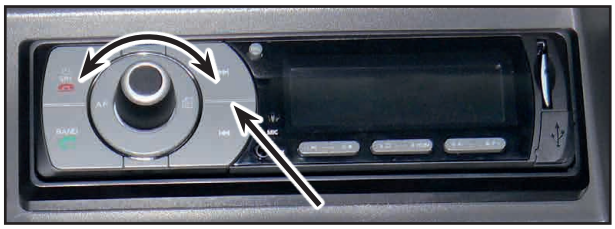

The menu is called up by briefly pressing the button to the right of the volume knob. On access, the display shows available menu items. The *Reset-confirm* entry is used to restore the default settings.

- The menu key can be used to navigate up one level in the menu. Alternatively, this can be done using the left arrow key.
- Turn the volume knob to navigate to the next or previous point.
- Press the volume knob briefly to access a menu item. Settings can be confirmed there. Also, navigating one level in the menu is possible. Alternatively, this can be done using the right arrow key.

Press and hold the menu key to exit the software menu.

Bluetooth

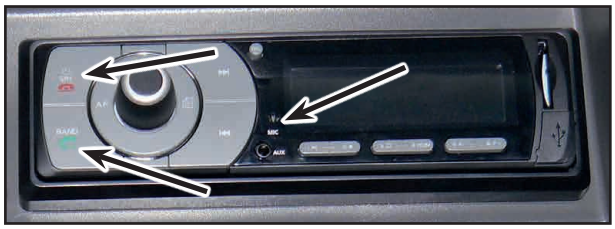

To use the Bluetooth hands-free function, a mobile phone must be paired with the radio. To pair the mobile phone with the radio, it must be switched on. Search the phone for the available Bluetooth device. Pairing is done by means of the passcodes *1234* or the displayed code on the mobile phone. The successful pairing is then displayed on the mobile phone. After successful pairing, most mobile phones can automatically re-establish the Bluetooth connection the next time the radio is switched on.

Calls can be accepted via the button with the green telephone handset. Calls can be ended or rejected using the button with the red handset. An internal microphone is integrated in the radio. Prolonged pressing of the button with the green handset activates a new dialling of the last number.

NOTE

Any other information as well as settings can be found in the supplied instruction manual for the radio.

Engine operation

Before starting the motor

⚠ WARNING

- Always make sure that there are no persons in the working range of the machine. Honk if necessary.
- Never run the engine inside closed rooms without fume extraction system.
- Ensure sufficient ventilation.

Requirements for motor start

Main battery switch for power supply

The main battery switch for the power supply is located at the right side of the cabin below the ignition lock.

- Switch on the main battery switch for the power supply.

Switch on ignition

The ignition lock has 3 positions:

1 Switch off the ignition / shut-off the diesel engine
2 Switch on ignition
3 Start diesel engine

Start the engine

NOTE

Start the engine only from the driver's seat.

- Turn the ignition key to position (3) and hold it until the engine starts.
- Release the key as soon as the engine is running. Never hold the key longer than 20 seconds in starting position (3).

NOTE

When the ignition key is returned to position (2) before the engine is started, wait with the next starting attempt until the engine has come to a stop. In this case turn the ignition key first to position (1) and then repeat the attempt.

Shut down the engine

NOTE

Shut off the engine only from the driver's seat.

- Turn the ignition key to position (1).

NOTE

Before parking the machine allow the engine to run 1 - 2 minutes at low speed range so that all important engine parts can cool down.

- Each time the engine stops the hand brake is automatically applied!

Travel operation

General notes

⚠ WARNING

Danger to life or severe injury by losing control over the vehicle!

- In case of a warning message (red) on the terminal, stop the machine and eliminate the fault. Should this not be possible, contact HORSCH Service or the authorized dealer.
- Attention! Vehicle swings out when cornering.
- Due to the vehicle dimensions, the driving characteristics of the machine demand certain training.
- You should never store any objects in the area of the pedals, so that full pedal travel is ensured at all times.
- Always match the travel speed of the machine on the road and in the field to the prevailing conditions.
- Reduce the travel speed when driving downhill. Do not exceed the permissible angles of incline. Refer to the section *Use on hillside locations*.
- In downward sloping terrain or smooth ground the vehicle may be lifted off by the transported load when braking.

Forward / reverse driving

⚠ NOTE

The driver can switch between pedal and drive lever at any time. This change takes place fully automatically.

Forward driving

Driving via foot pedal

After starting the engine, the travel drive is in neutral position.

- Release the parking brake via the switch at the right-hand side on the roof console.

Parking brake

- Turn the direction of travel switch on the multi-function armrest forward.

Switch for direction of travel selection

- Press the foot pedal to start moving and accelerating the machine.
- Change the speed by adjusting the foot pedal.

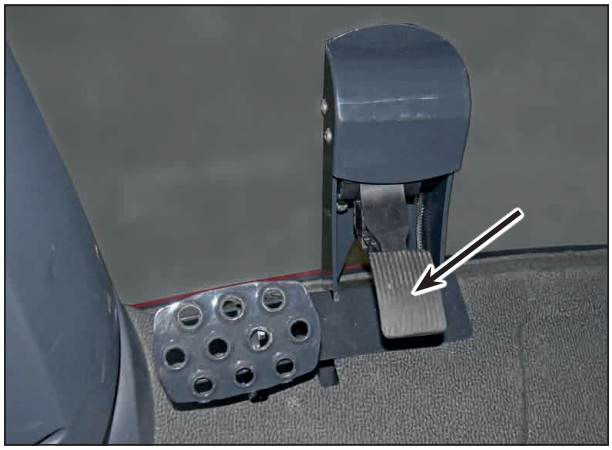

Pedal

Driving via drive lever

- Press and hold the release button on the rear of the drive lever.

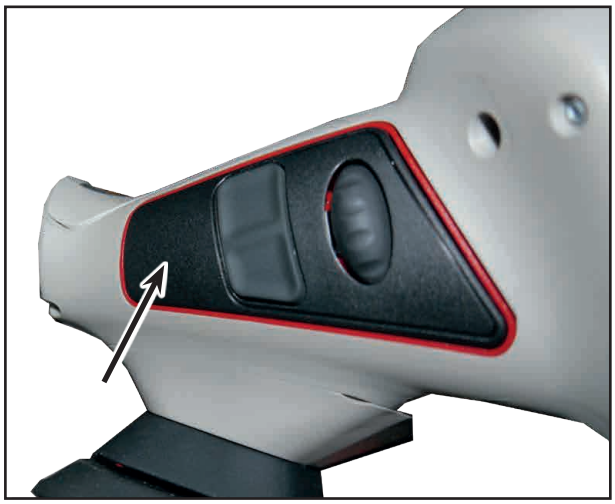

Drive lever release button

- Move the drive lever forward to select the direction of travel and set the machine in motion.

Drive lever

- The drive lever returns to middle position when released. The speed remains constant.
- Move the drive lever forward to accelerate the machine further.
- Pull the drive lever back to brake the machine. The machine decelerates till stopped.

Reverse driving

NOTE

When reversing, the operator must make sure that no persons are about in the danger zone. The machine may only travel backwards with the assistance of a guide when persons are in the vicinity.

Driving via foot pedal

After starting the engine, the travel drive is in neutral position.

- Release the parking brake via the switch at the right-hand side on the roof console.

Parking brake

- Turn the direction of travel switch on the multi-function armrest backward.

Switch for direction of travel selection

- Press the foot pedal to start moving and accelerating the machine.
- Change the speed by adjusting the foot pedal.

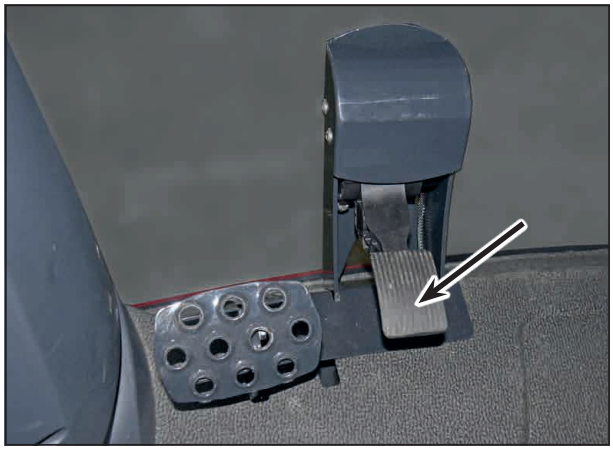

Pedal

Driving via drive lever

- Press and hold the release button on the rear of the drive lever.

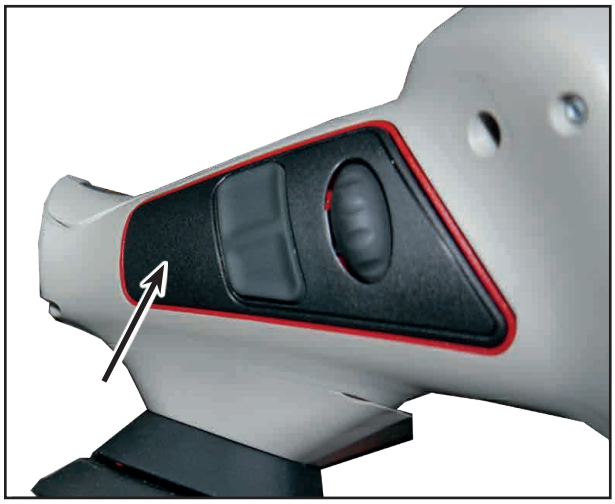

Drive lever release button

- Move the drive lever toward the back to select the direction of travel and set the machine in motion.

Drive lever

- The drive lever returns to middle position when released. The speed remains constant.
- Move the drive lever backward to accelerate the machine further.
- Move the drive lever forward to decelerate the machine. The machine decelerates till stopped.

NOTE

The following applies for forward and backward travel:

- When the foot pedal is pressed, the pedal takes over the specified speed. When the drive lever is actuated, it will take over the specified speed.

Reverse direction of travel

The direction of travel can be reversed by pressing the release button and simultaneously moving the driving lever to the left. This means that the vehicle will not stop at 0 mph (0 km/h), but will automatically change the direction of travel.

Drive lever

With manual steering, the rear axle is steered by moving the drive lever to the left or right. Reversing and headland management are then no longer possible.

Brakes

Parking brake

Always release the parking brake before setting of on road travel or before starting in the field. Travel operation with the parking brake applied is not possible!
The release switch for the parking brake is located at the right hand side of the roof console.

- To release the parking brake, actuate the console switch.

NOTE

The parking brake can be engaged at any time while driving. It can also be used for emergency braking.

Parking brake

The current status of the parking brake is displayed on the machine terminal.

- Red: Parking brake engaged
- Grey: Parking brake released

Service brake

WARNING

Danger to life or severe injury by losing control over the vehicle! Check the function of the service brake each time before setting off!

- ➢ Release foot pedal.
- ➢ Press the brake pedal to decelerate or brake the vehicle.

Pedal

NOTE

Maintain the required safety distances depending on load and speed!

Drive slippage control

The self-propelled machine comes with fully automatic drive slippage control (ASR).

NOTE

Manual intervention in difficult terrain is not required!

Travel modes

With the self-propelled crop protection sprayer one differentiates between two different travel modes. Switching between road operation and field operation is possible.

- Switching to the desired travel mode is done via the console switch on the right-hand side of the roof console. It may take some time after switching until the machine has reached all states (suspension up/down, etc.).

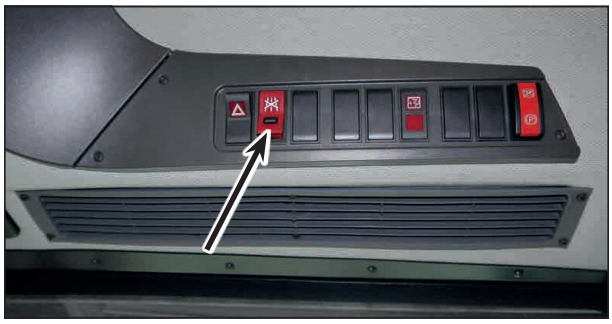

On the machine terminal, the current driving mode can be seen from the surface.

Road operation

Rear axle steering can be activated when driving under 9 mph (15 km/h). The rear axle centres above 9 mph (15 km/h), and axle steering is deactivated automatically. When driving slower again than 9 mph (15 km/h), the driver must reactivate rear axle steering.

Field operation

When field mode is activated, rear axle steering can be switched on and off using the *Rear axle steering on/off key*.

The current status of the rear axle steering is displayed on the terminal.

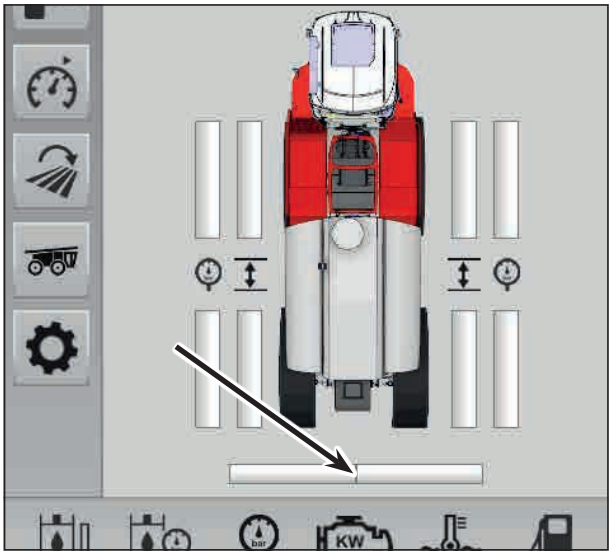

- Pressing the *Rear axle steering on/off* button activates rear axle steering.
- Pressing the *Rear axle steering on/off* button again deactivates rear axle steering again.
- With travel speeds of less than 3 mph (5 km/h) the *button Rear axle steering on/off* must be pressed and held until the rear axle has reached its target position.

  This serves as a safety control to avoid personnel damage.
- The *Manual on/off* button can be used to activate/deactivate steering for the manual mode.

- The *Rear axle steering slope mode on/off* button can be used to activate/deactivate steering for the slope mode.
- A manual correction for drift on the slope can be made on the rotary wheel. This has a proportional influence on the rear axle steering.

Manual correction for drift on a slope

Cruise control

⚠ WARNING

Danger of accident caused by improper operation of the cruise control function! Drive assistance systems have been developed to support the driver. However, they cannot replace his awareness!
When driving the vehicle, the driver takes on full responsibility and must always pay attention to the current traffic situation!

Cruise control settings can be made and changed through the terminal or with the drive lever on the multi-function control unit.

⚠ NOTE

Two speeds can be set and saved both in road operation and in field operation.

Setting via the drive lever

- Accelerate to the desired speed.
- Press and hold button until an audible signal sounds. The desired speed for cruise control 1 has thereby been saved.
- The procedure for cruise control 2 is identical.

- The currently set cruise control is displayed on the terminal.
- Quit the cruise control setting by braking, actuating the foot pedal or drive lever.

Setting via the terminal

- Select the button on the terminal and save the desired speeds.
- Activate the cruise control using the buttons on the control lever.
- Quit the cruise control setting by braking, actuating the foot pedal or drive lever.

Road / field travel

NOTE

When driving on roads / in the field, the chapter *Safety notes* must also be observed!

Check before road / field travel:

- the light system for damage, function and cleanliness.
- the brake and hydraulic system for apparent defects.
- the function of the brake system.
- the overall machine for cleanliness.

WARNING

Danger of crushing, shearing, cutting, cutting off, being caught, wound up, pulled in and impact by accidental movements of the machine.

- Check the folding devices of the machine for correct locking of the transport locks.
- Secure the machine against accidental movements before starting road / field travel.

WARNING

Danger of crushing, cutting, being caught, being pulled in and impact due to insufficient stability and tipping over.

- Adjust the personal travel mode in such a way that you will at any time have control over the vehicle.

Be aware of your own abilities, account for the road, traffic, sight and weather conditions as well as the driving characteristics of the machine!

WARNING

Danger of falling off the machine in case of impermissible transport ride!
It is not allowed to ride on the machine as a passenger and/or to climb on machines in operation. Direct persons out of the danger zone before starting the machine.

WARNING

Danger of damage due to inadequate stability and inadequate steering and braking ability of the machine if used for purposes other than those intended!

- These hazards cause severe or even fatal injuries.
- Pay attention to the maximum payload and the permissible axle loads of the machine.
- Observe the total weight of the machine.
- If necessary drive with the tank only partly filled.

CAUTION

- In order to maintain a sufficient safety distance to overhead lines, the total height of the machine must not exceed 4 m (13 ft).
- When driving or towing on public roads you must comply with the national traffic regulations.

Towing

⚠ DANGER

Danger of severe injuries caused by the machine rolling away! Always use the wheel chocks provided when the machine is stopped!

The vehicle can be towed by four towing eyes on the frame.
These are located at the front and the rear on the axles.

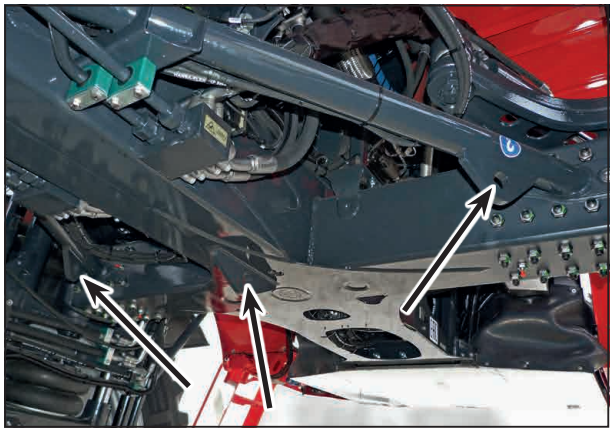

Front towing eyes

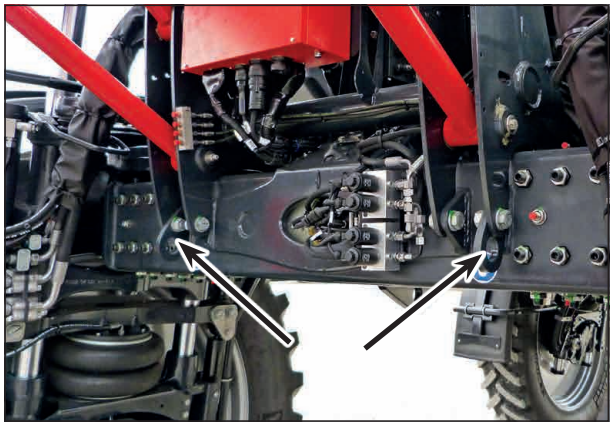

Rear towing eyes

- Before towing drain the spraying mixture container by pumping it over.
- Operate the hand pump to release the parking brake. Refer to the section *Releasing the parking brake*.
- Maximum permissible towing speed: 5 km/h [3 mph].
- The vehicle must not be towed more than 2 km [1.2 mi] to the next parking opportunity!
- The diesel engine must be running throughout the towing process, so that steering system and service brake are fully functional.
- With the engine stopped no braking effect can be guaranteed and the steering is very hard to move in the emergency steering mode. Towing must in any case be performed only with the help of a towbar.
- Three-point hitching should in any case be used for towing.

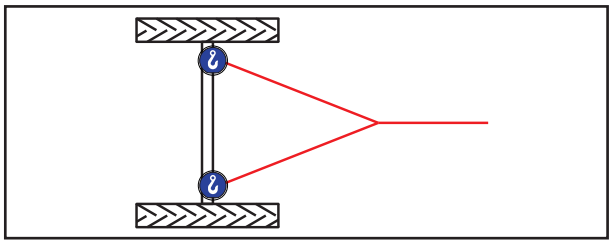

Example of three-point hitching

Remote start / jump start

The self-propelled crop protection sprayer has one 12 Volt electrical system.

⚠ CAUTION

Danger of explosion caused by inappropriate charging processes with jump leads or battery chargers! Avoid contacting the battery acid with skin and textiles, avoid eye contact!

The following notes must strictly be followed and complied with when starting the vehicle from an assisting source!

- Avoid the creation of sparks or naked flames in the vicinity of batteries.
- When handling batteries wear eye protection and protective clothing.
- Use a booster battery with the same voltage. Its capacity (Ah) should not be considerably lower than the capacity of the discharged vehicle battery.
- Do not disconnect the discharged battery from the vehicle network.
- Defrost a frozen battery before connecting the jump leads (see chapter *Safety*).
- Switch off unnecessary consumers.

- Never lean over the battery during this process.
- In case of assist starting, the vehicles must not touch each other.
- The pole clamps of the individual cables must never come into contact with one another.
- For starting assist you must first connect the positive cable with the positive pole on the external battery and then with positive pole on the discharged battery. Then connect the negative cable with the negative pole on the external battery and the end of the negative cable with a earth contact point on the vehicle.
- When coupling the positive terminals and connecting the negative terminal of the assisting battery to the frame of the vehicle, the engine should be switched off on both vehicles.
- When starting from a different source, first switch on the assisting vehicle and then the receiving vehicle. It is recommended that the lighting be switched on for the receiving vehicle to protect the electronics from overvoltage.
- After successful starting disconnect the cables in reverse order.

If the batteries of the 12 Volt vehicle electrical system are discharged, recharge them by running the engine after remote starting.

If the battery has been discharged and no work is due on the machine which necessarily requires the engine to run, the battery can be charged with the aid of a battery charger.

⚠ CAUTION

Do not charge via jump starting! This may cause the battery to explode.

⚠ NOTE

Battery maintenance must follow the battery manufacturer's specifications.

Machine terminal

Current values of the vehicle for road or field operation are displayed on the machine terminal.

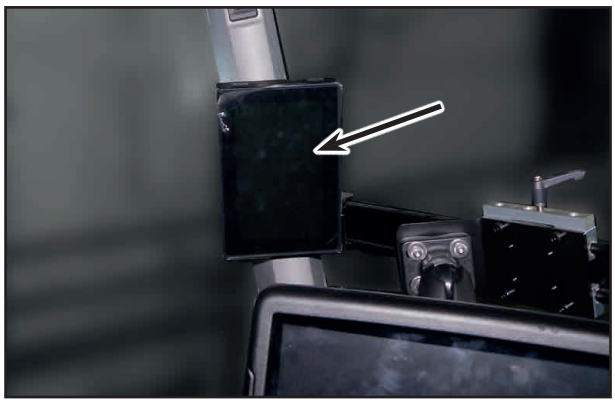

Machine terminal in the cabin

Operation

The machine terminal is operated via the rotary pushbutton knob and the buttons on the multi-function control panel.

- Turn the knob to navigate to the individual symbols. There the values can be changed in the submenu.
- A function can be selected by pressing the rotary knob.
- Press the ESC key to return to the main screen.

Road operation

The following screen is displayed for road operation.

1 Rotational speed display
2 Speed display
3 Target speed

When a speed is specified using the drive lever / foot pedal, the red dot indicates the target speed and the speedometer the actual speed.

Field operation

The following screen is displayed for field operation.

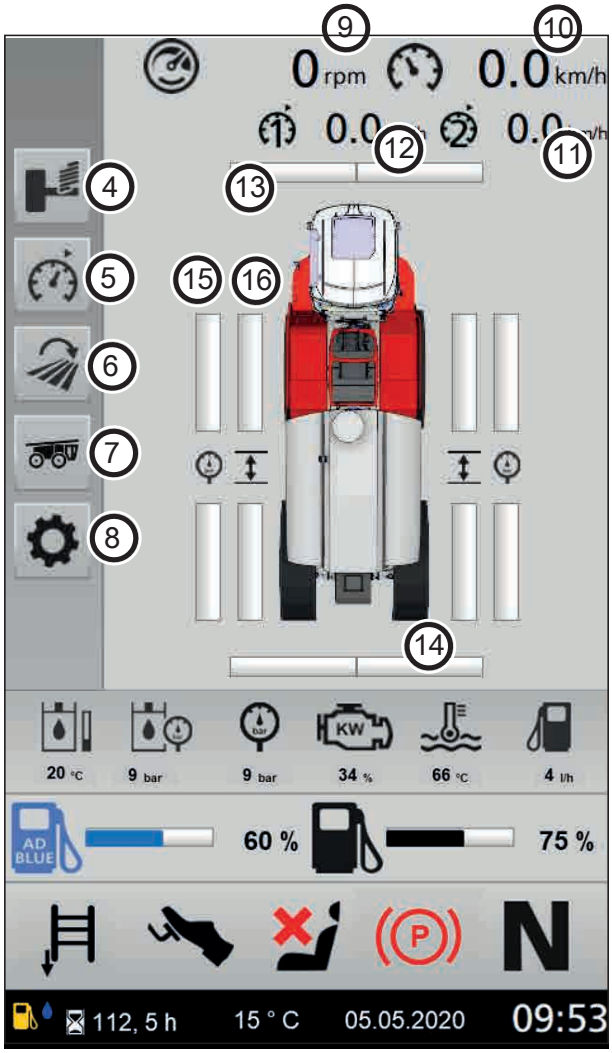

4 Suspension in field mode setting
5 Cruise control setting
6 Headland management setting
7 Vehicle settings
8 Display info/settings
9 Engine revolutions per minute
10 Current speed
11 Cruise control 2 speed
12 Cruise control 1 speed
13 Steering angle front axle bar graph
14 Steering angle rear axle bar graph
15 Hydraulic pressure currently applied to wheel
16 Height of the wheel

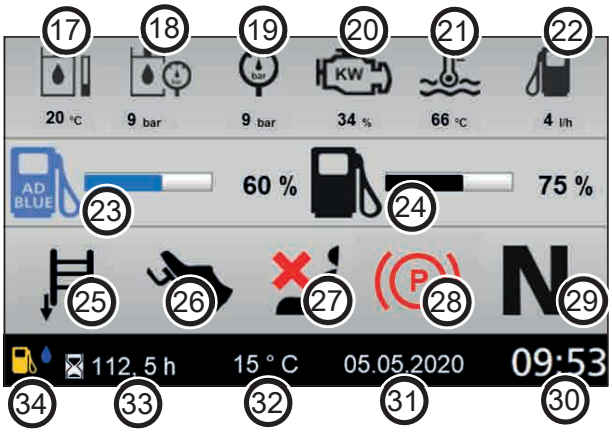

17 Hydraulics temperature
18 Hydraulic pressure of the travel drive
19 Air pressure
20 Engine utilisation
21 Engine temperature
22 Fuel consumption
23 Level of AdBlue tank
24 Filling level of fuel tank
25 Status of access ladder
26 Speed setting (foot pedal or drive lever)
27 Driver seat switch
28 Status of parking brake
29 Display of direction of travel
30 Time
31 Date
32 Outside temperature
33 Operating hours
34 Warning messages

Warning message – diesel containing water (example)

NOTE

For a list of all warning messages and for the operation of the machine software, refer to the corresponding terminal operating manual with the respective software version.

Attachment

Overview

1	Spraying mixture container	8	Agitator
2	Dome spraying mixture container	9	External control terminal
3	Fresh water tanks left and right	10	Filling connections
4	Hand washing tank	11	Storage compartment (right and left machine side)
5	Spraying pump	12	Maintenance access
6	Piston diaphragm pump	13	Outside cleaning right side of machine (optional)
7	Swivelling illuviation valve	14	Folding boom

⚠ DANGER

Danger of serious accidents
Transport rides on the machine, especially the steps or maintenance access, are prohibited!

Components attachment

Spraying mixture container

⚠ WARNING

Danger of poisoning - Do not climb into the spraying mixture container!

- Only approved technical personnel may enter the spraying mixture container.
- Before entering the spraying mixture container, it must have been completely drained and cleaned with the cleaning agents specified by the spraying agent manufacturer.
- Comply with the national regulations and laws for work in tight spaces!

⚠ WARNING

Danger of falling off when climbing on the spraying mixture container!

- Do not climb on the spraying mixture container.

The spraying mixture container is designed to retain water, spraying agents and fertilisers.
With the aeration and venting system, the spraying mixture container is aerated during spraying and vented during filling.
The internal cleaning nozzles clean the spraying mixture container with fresh water after the spraying process.
The agitator mixes the spraying mixture inside the spraying mixture container and ensures a homogeneous mixture.
The current contents of the spraying mixture container can be read via the control terminal in the cabin and the external control terminal.

Access steps

The dome of the spraying mixture container is accessible via the swivelling access ladder and the maintenance access.
The access ladder is lowered or raised from the driver's cabin. The railing must be folded up when working when the folding boom is unfolded.

Ascent to maintenance access

- When climbing on the maintenance access always maintain contact on at least 3 points (hands or feet) of the access steps.

⚠ WARNING

Risk of crushing when folding the access ladder.

- Never reach into the crushing area of the ladder.

Maintenance access

⚠ DANGER

Serious accidents by falling down!

- ➢ No passengers are allowed to ride on the machine!
- ➢ When climbing on the maintenance access always maintain contact on at least 3 points (hands or feet) of the access steps.

Maintenance access

Dome

⚠ DANGER

- ➢ Danger of injury by poisonous vapours! Do not climb into the spraying mixture container!

Dome

The dome is fitted with a sieve to prevent the ingress of impurities when the spraying mixture container is filled via the dome.

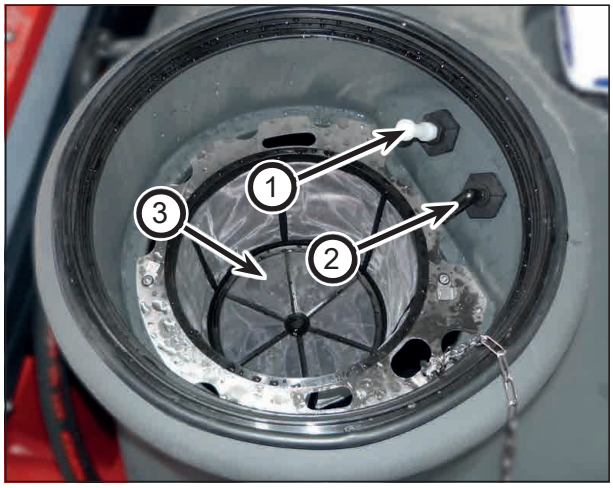

1 Dome cleaning nozzle
2 Return flow
3 Dome screen

⚠ NOTE

The dome screen must be checked daily and cleaned as necessary!
A cleaning nozzle is installed to facilitate cleaning of the dome screen.

Fresh water tank

The fresh water tanks serve to retain fresh water. The capacity is 750 litres [200 gal]. It is used for:

- dilution of residual quantity in the spraying mixture container.
- cleaning (rinsing) the entire crop protection sprayer.
- cleaning the suction fitting as well as the spraying lines with the tank filled.
- Outside cleaning of the machine.

Fresh water tank left and right on the machine

The current contents of the fresh water tank can be read via the control terminal in the cabin and the external control terminal (only with CCS Pro).

The filling port is located to the left of the illuviation valve.

Filling port

The ventilation for the fresh water tanks is located in the centre between spraying mixture container and engine compartment.

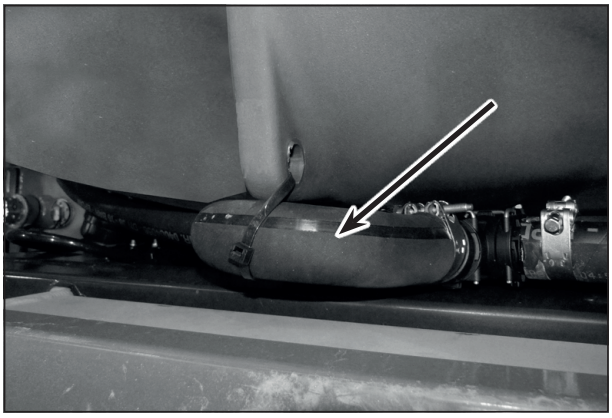

Fresh water tank ventilation

⚠ WARNING

Danger of accident when performing repair work on the fresh water tank! Open the maintenance opening only for maintenance work and by trained personnel.

Hand washing tank

The hand washing tank is designed to retain clear water.

⚠ WARNING

Danger or poisoning by contaminated water in the hand washing tank!
Do not use the water in the hand washing tank as drinking water!

The hand washing tank is located on the left-hand side of the machine on the maintenance access.

Hand washing tank

The drain valve of the hand washing tank is located on the left-hand side of the access ladder.

Drain for hand washing tank

A soap dispenser for hand cleaning is located to the left of the access ladder.

Soap dispenser

Spraying pump

The crop protection sprayer is equipped with a centrifugal pump for the spraying system. This is located behind the illuviation valve. The pump is hydraulically driven via a proportional valve and adjusts to the required quantities.

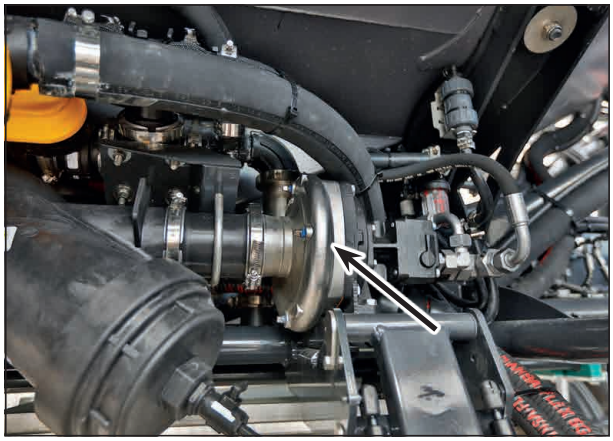

Spraying pump

The pump used does not require pulsation damping, because centrifugal pumps generate continuous flow and pressure.

- The spraying pump installed in this machine is nearly maintenance-free!
- The spraying pump is not equipped with dry running protection and may therefore be operated only temporarily without fluid!

NOTE

Fill the pump with fluid before initial commissioning and after each draining before switching on.

Technical data:	
Type	Hypro 9316C3U-M10 Hypro 9315S3U-M10
Flow rate in l/min at 0 bar	approx.1000 l [264 gal]
Flow rate in l/min at 5 bar	approx. 550 l [145 gal]
Maximum pressure in bar	8 [116 psi]

The pump has a cavity with sealing fluid as dry running protection and for cooling.

- ➢ If the filling level drops, check for leaks.
- ➢ Check the liquid sealant level annually. Open the plug on top of the pump for this purpose. The filling level of the liquid sealant must reach shortly below the edge of the cavity.

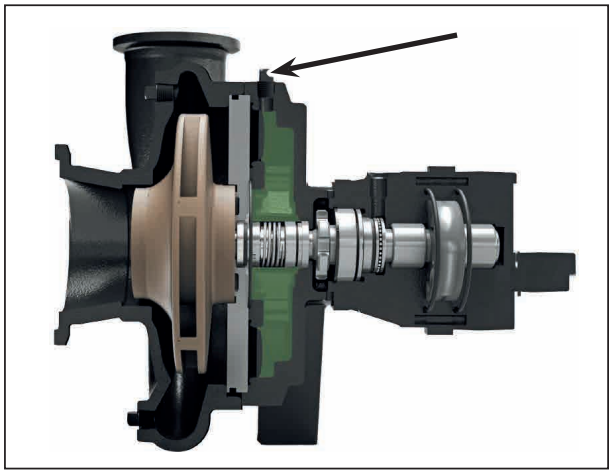

NOTE

Slight leaks may occur initially with new spraying pumps. Slight formation of oil drops on the pump housing may occur until the mechanical seal has been broken in.
Check the oil level of the pump regularly and top it up if necessary.

Piston diaphragm pump

The piston diaphragm pump (1) is located behind the spraying mixture container.

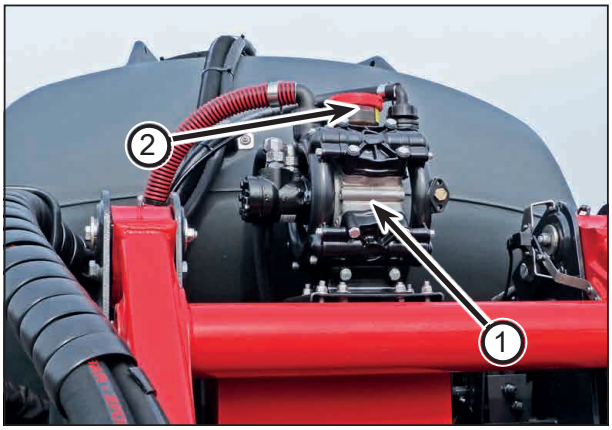

1 Piston diaphragm pump
2 Reservoir

Functions of the pump:

- Draws in fresh water during continuous inside cleaning (CCS).
- Suction aid during filling process.

A reservoir (2) is located on the top side of the pump allows checking and topping up the oil level.

NOTE

- Do not overfill the reservoir; the oil level should lie between MIN and MAX.
- Switch off the pump to check or top up the oil level.
- Contact HORSCH Service if the oil must be topped up daily or if the oil is discoloured!

Technical data:	
Type	AR 185
Flow rate at 480 rpm	160 l/min [42 gal]

Illuviation valve

The pivotable illuviation valve is used to pour in, dilute and draw in crop protection agents and carbonyl diamide.

The illuviation valve can be swivelled to the working and transport position with the handle.

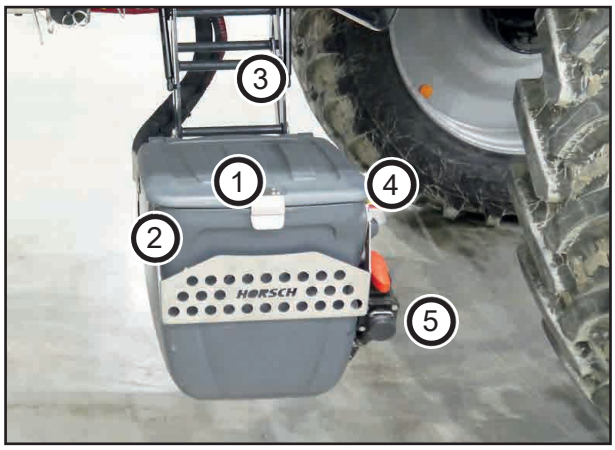

Illuviation valve with stainless steel funnel and folding rest

1 Hinged lid
2 Handle to swing the illuviation valve
3 Parallelogram arm for swivelling the illuviation valve to the working and transport position
4 Switching fitting for canister flushing / closed circuit flushing line / shock nozzle and washing gun
5 Switch-over ball valve for sucking-off and connecting external filling devices

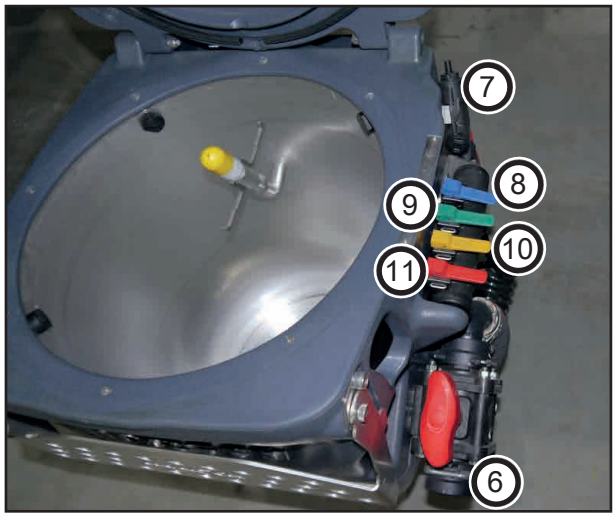

6 Connection external filling devices
7 Washing gun
8 Activate/deactivate the canister flushing
9 Activate/deactivate washing gun
10 Activate/deactivate the shock nozzles
   - The shock nozzles support the illuviation of difficult to dissolve crop protection agents.
   - Two rinsing nozzles and the shock nozzles in the lower area of the Illuviation valve are activated.
11 Activate/deactivate the washing nozzles

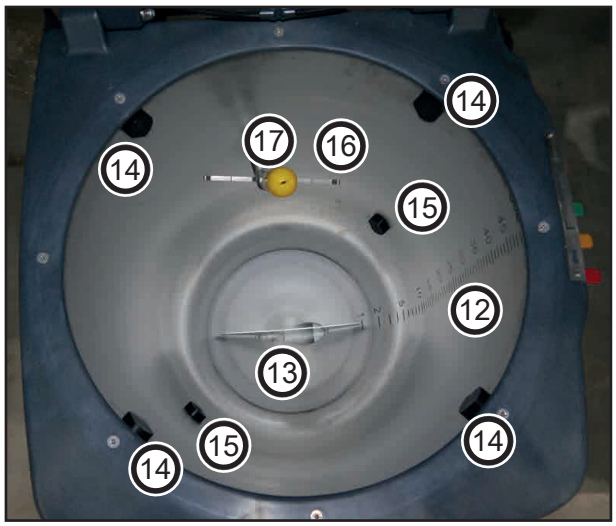

12 Filling level gauge
13 Suction opening
14 Rinsing nozzles for dilution and illuviation of crop protection agents
15 Shock nozzles for dilution and illuviation of crop protection agents
16 Pressure plate
17 Rotating canister flushing nozzle to flush out canisters or other containers

⚠ NOTE

Depending on the position of the ball valve of the suction side, water exits from the fresh water tank or spraying mixture from the spraying mixture container on the canister flushing. Activate canister flushing to this end (8) and push the pressure plate (16) down. Water or spraying mixture exits at the rinsing nozzle (17).

Washing gun

The illuviation valve can be cleaned after filling with the washing gun. Apart from this, deposited residues can be flushed out of the canisters.

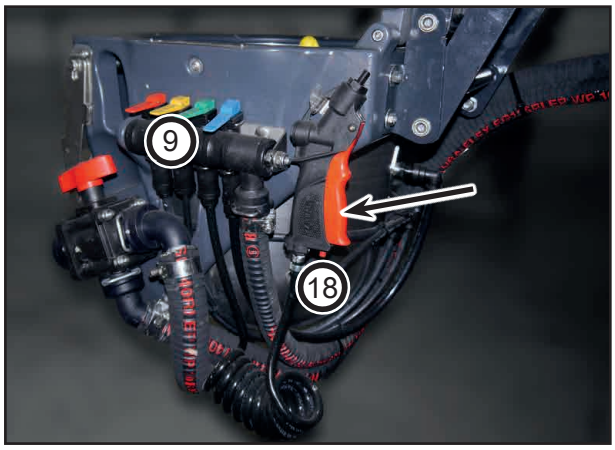

Washing gun

- To fix the handle actuation press the button (18) during operation.
- Press the handle to release.
- After switching off (9) relieve the residual pressure.

⚠ NOTE

Depending on the position of the ball valve of the suction side, water exits from the fresh water tank or spraying mixture from the spraying mixture container on the washing gun. Activate the washing gun to this end (9) and clean the illuviation valve.

Retaining clip for metering cup

The retaining clip serves for a safe and firm stand of the metering cup.

- Fold down the retaining clip.
- Place the metering cup inside in order to be able to meter the crop protection agent in it.

Retaining clip

Fittings

The filling ports, external control terminal, filters and the illuviation valve are located on the left side of the machine.

Filter

NOTE

Use all specified filters of the filter equipment. Clean the filters at regular intervals.

Trouble-free operation of the crop protection sprayer is only ensured with flawless filtration of the spraying mixture. Appropriate filtering considerably influences the treatment success of the crop protection measure.

Pay attention to the permissible filter combinations or mesh sizes. The mesh size of self-cleaning pressure filters must always be smaller than the nozzle opening of the nozzles used.

Please note that the use of pressure filter elements with 80 or 100 meshes/inch² may cause the separation of biocatalysts with some crop protection agents.
Follow the notes of the crop protection agent manufacturers.

Pressure filter

The pressure filter prevents contaminants from entering into the nozzle line. Different degrees of fineness are available to suit each application. The filter is fitted with an 80 meshes/square inch element as standard.
In case of applications with liquid fertiliser or when using bigger nozzles it is recommended to use coarser elements in order to keep the pressure drop in the filter as low as possible.

The self-cleaning pressure filter prevents blocking of the nozzle filters in front of the spray nozzles.
In circulation mode *Sprayer main switch off* the inside surface of the pressure filter insert is constantly flushed, and undissolved spraying agent and dirt particles are caught in the dome screen when the chemical is returned to the spraying mixture container.

Auxiliary pressure filter

An additional pressure filter is installed on the centre piece of the folding boom.

With certain spraying agent combinations, it can happen that due to chemical reactions flocks form in the long lines and clog the nozzles. The auxiliary pressure filter shortens the line lengths between filter and nozzle and thus prevents flocculation.

If the first pressure filter is defective, for example due to excessive water pressure, the auxiliary pressure filter can be used to retain the dirt from the nozzles.

The pressure filter is equipped with 80 meshes/inch² insert as standard. Depending on the use, additional filter inserts with 50 or 100 meshes/inch² insert are available.

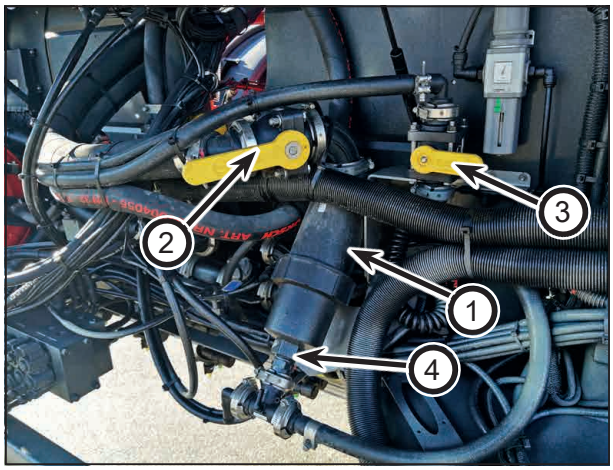

1 Auxiliary pressure filter
2 Shut-off lever
3 Pressure filter bypass
4 Drain valve

Clean the auxiliary pressure filter as needed. Lower the parallelogram for this purpose. Turn the lever (2) by 90° to thus block the flow to the pressure filter. Close the valve (3) to block the pressure filter bypass thus preventing a return flow.
Open the valve (4) and collect any draining agent. Dispose of the agent if necessary or return it to the spraying mixture container. Open the filter housing with the pressure filter wrench. Clean the auxiliary pressure filter.

Repeat all steps in the opposite order after cleaning.

Dome screen

The dome screen prevents contaminants from entering into the spraying mixture container during filling through the dome. Likewise, contaminants are retained in the spraying mixture container during circulation and pressure filter flushing. The screen has a standard mesh size of 1 mm. The dome screen must be checked daily and cleaned as necessary!
A cleaning nozzle is installed to facilitate cleaning of the dome screen.

Suction filter

The suction filter filters the water/chemical before the piston spraying pump (mesh size 0.9 mm). Different mesh sizes are available depending on the application.

Overview of pressure filter elements

Meshes/ square inch	Nozzle size	Mesh size [mm]
32		
50	from ‘03’	0.35
80	‘02’	0.20
100	up to ‘015’	0.15

Cleaning of the filters, see chapter *Care and Maintenance.*

Overview of filters

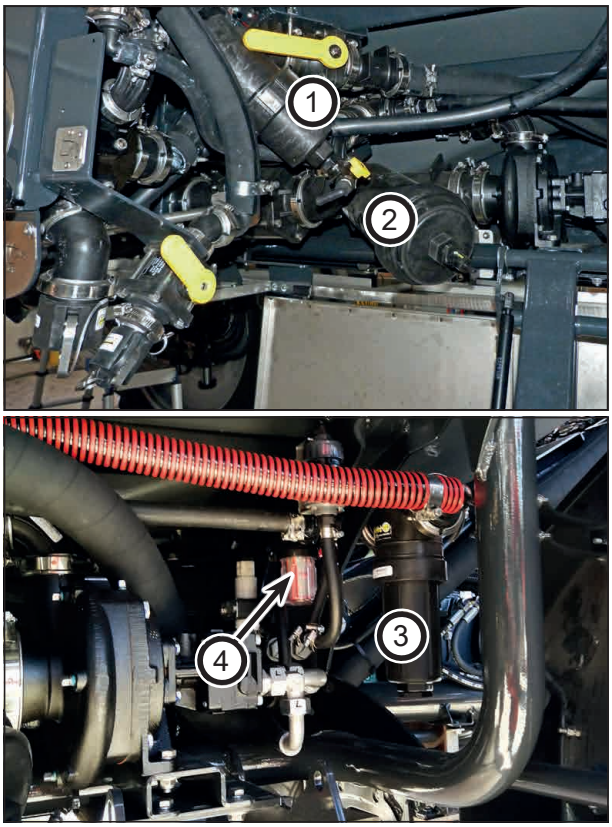

1 Pressure filter
2 Spraying pump suction filter
3 Cleaning pump suction filter
4 Filter for high pressure cleaner and NightLight cleaning (optional)

Water systems

Overview

Depending on the type of operation and installation of a cleaning pump, a total of four water systems must be distinguished between.

	Centrifugal pump available as spraying pump	Piston diaphragm pump available for cleaning	Type of suction and pressure valves
Basic	yes	no	mechanical
CCS	yes	yes	mechanical
Basic Pro	yes	no	electric
CCS Pro	yes	yes	electric

Operation

- For machines with the Basic and CCS equipment, operation takes place via mechanical valves.
- For machines with the Basic Pro and CCS Pro equipment, operation takes place via the external control terminal.

Suction

- To enable the machine to suction independently, an optional Powerfill filling pump may be installed.

Water system Basic

Ports

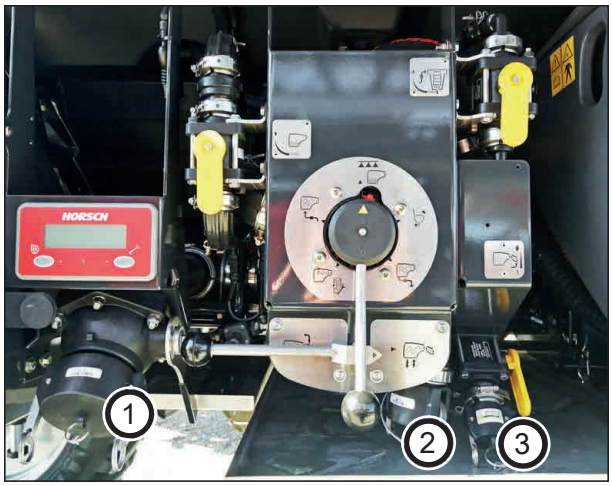

1 Direct filling, spraying mixture container residue drain
2 Spraying mixture container pressure output
3 Filling port for fresh water tank

External control terminal

External control terminal Mini

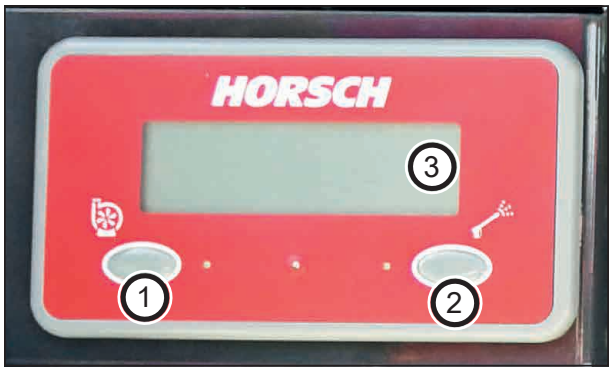

1 Switching the spraying pump On/Off
2 Activating/deactivating the high pressure cleaner (optional)
3 Display of filling level spraying mixture container

When circulation is active, switching to the filling mode can be done on the external control terminal Mini with the *Switch spraying pump On/Off* button. Pressing the *Switch spraying pump On/Off* button again deactivates the pump.
When the filling mode is active, the filling function can be deactivated at the main terminal on the filling side. The circulation can then be reactivated on the main page.

Switch-over ball valves

The following functions can be operated via the switch-over ball valves:

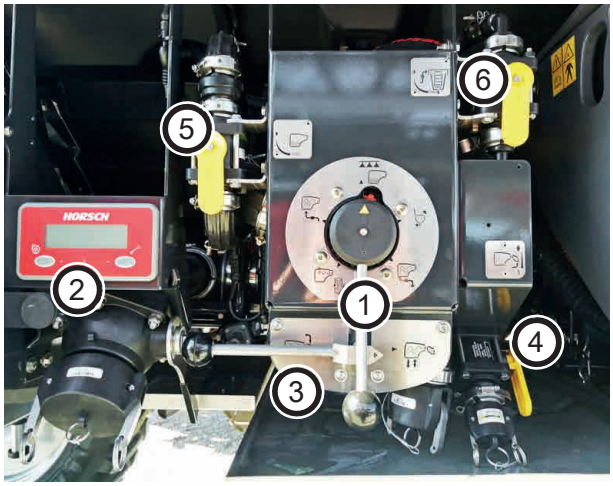

1 Mechanical 6-way valve pressure side
2 External control terminal Mini
3 3-way valve suction side
4 Filling the fresh water tank
5 Agitator intensity setting
6 Pressure filter flushing intensity setting

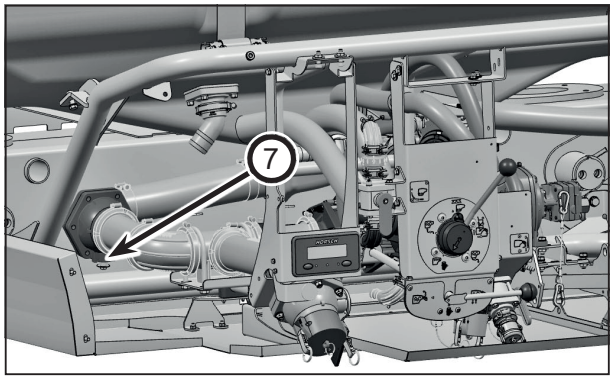

7 Opening/closing the spraying mixture container

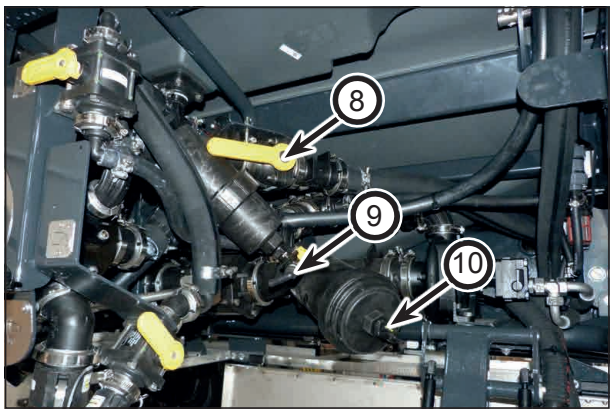

8 Pressure filter locking lever
9 Pressure filter flushing drain
10 Suction filter drain valve

Mechanical 6-way valve pressure side

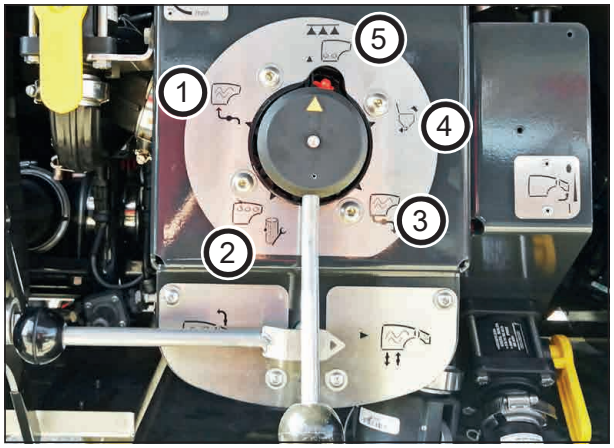

1 Filling the spraying mixture container
2 Internal cleaning/Pressure filter maintenance
3 External pressure output
4 Illuviation valve
5 Agitator/Spraying

3-way valve suction side

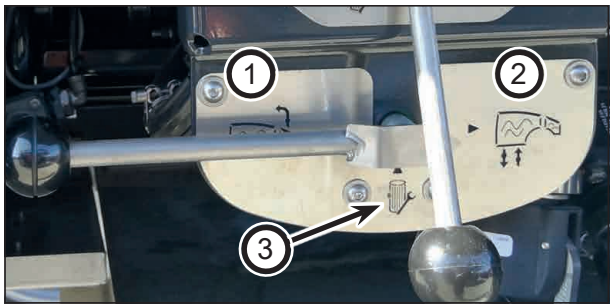

1 Suctioning from fresh water tank
2 Residue drain/Spraying mixture container suctioning
3 Suction filter maintenance

⚠ NOTE

The function has been selected when both triangles on the valve point in the same direction.

Water system CCS

Ports

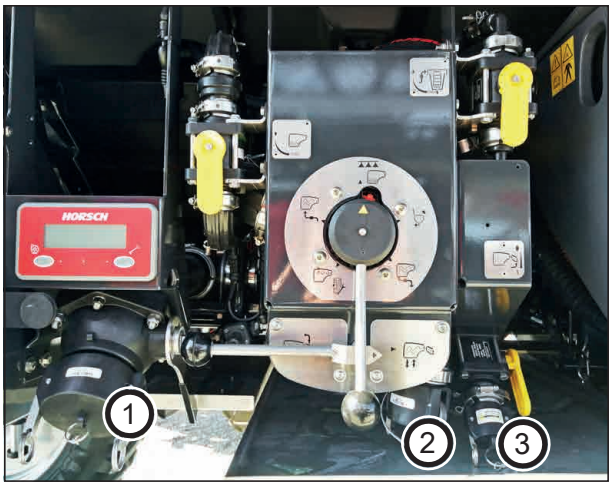

1 Direct filling, spraying mixture container residue drain
2 Spraying mixture container pressure output
3 Filling port for fresh water tank

External control terminal

External control terminal Mini

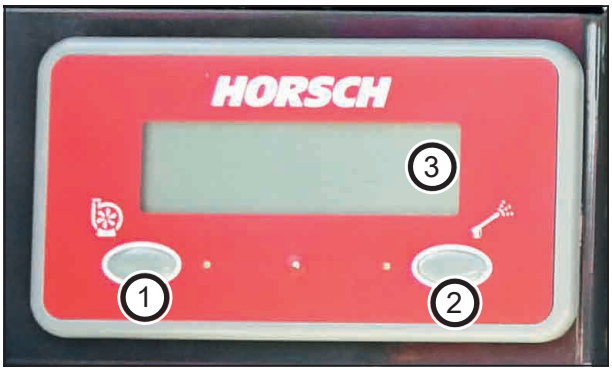

1 Switching the spraying pump On/Off
2 Activating/deactivating the high pressure cleaner (optional)
3 Display of filling level spraying mixture container

When circulation is active, switching to the filling mode can be done on the external control terminal Mini with the *Switch spraying pump On/Off* button. Pressing the *Switch spraying pump On/Off* button again deactivates the pump.
When the filling mode is active, the filling function can be deactivated at the main terminal on the filling side. The circulation can then be reactivated on the main page.

Switch-over ball valves

The following functions can be operated via the switch-over ball valves:

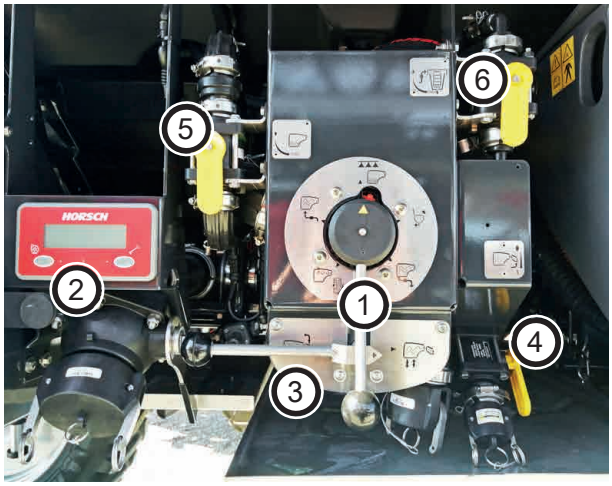

1 Mechanical 6-way valve pressure side
2 External control terminal Mini
3 3-way valve suction side
4 Filling the fresh water tank
5 Agitator intensity setting
6 Pressure filter flushing intensity setting

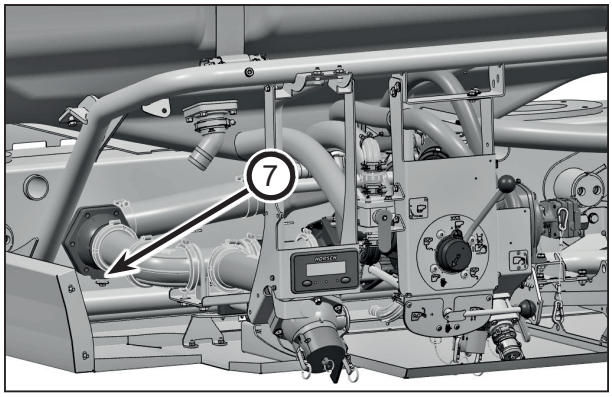

7 Opening/closing the spraying mixture container

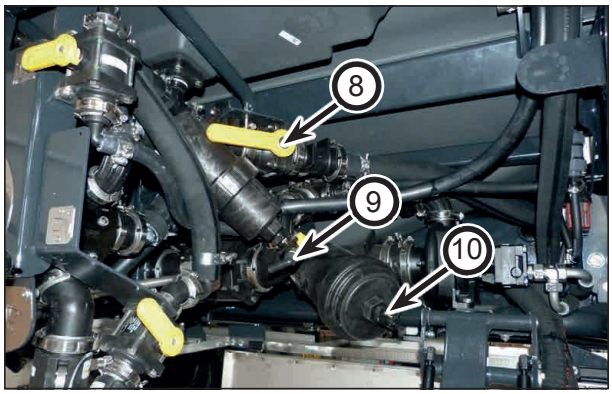

8 Pressure filter locking lever
9 Pressure filter flushing drain
10 Suction filter drain valve

Mechanical 6-way valve pressure side

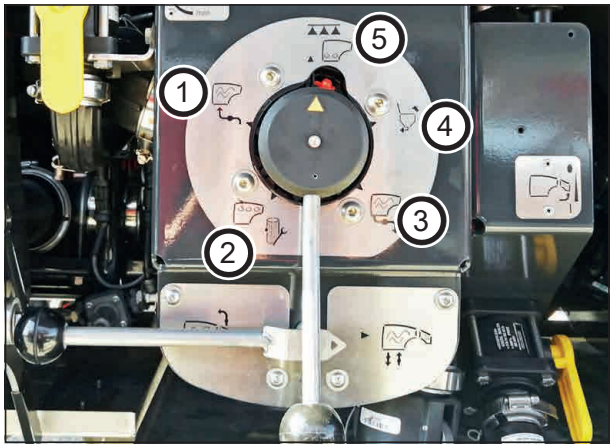

1 Filling the spraying mixture container
2 Internal cleaning/Pressure filter maintenance
3 External pressure output
4 Illuviation valve
5 Agitator/Spraying

3-way valve suction side

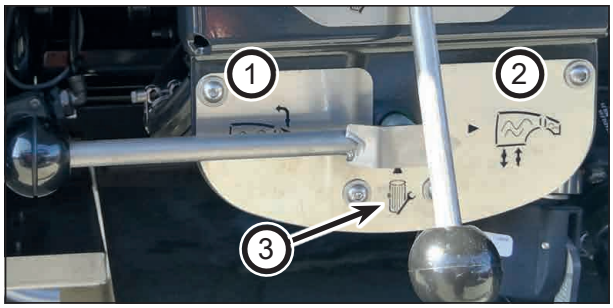

1 Suctioning from fresh water tank
2 Residue drain/Spraying mixture container suctioning
3 Suction filter maintenance

NOTE

The function has been selected when both triangles on the valve point in the same direction.

Water system Basic Pro

Ports

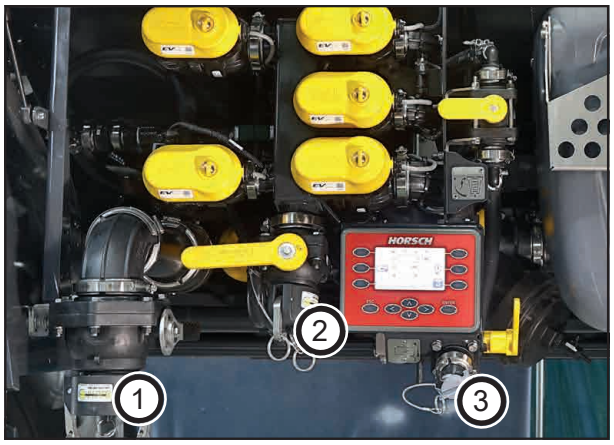

1 Direct filling, spraying mixture container residue drain
2 Spraying mixture container pressure output
3 Filling port for fresh water tank

External control terminal

External control terminal

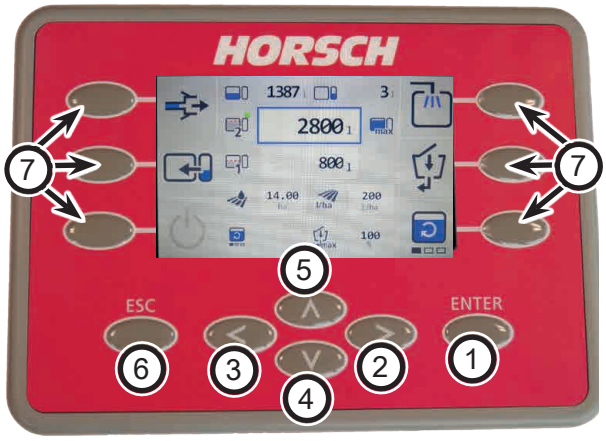

1 Confirm and accept changed value
2 Next page
3 Previous page
4 Navigate down in operating screen
5 Navigate up in operating screen
6 Leave area without saving
7 Selecting the outer areas of the operating screen

External control terminal

The following functions are operated via the keys on the external control terminal.

- Circulation off
- Suction, stirring, illuviation valve, pulling suction, wash program, pressure information, fresh water recirculation, high pressure cleaner/outside cleaning, winter storage
- Refer also to the information in the terminal operating instructions.

The following functions can be operated via the switch-over ball valves:

- Switching between internal and outside cleaning
- Pressure filter flushing intensity with mechanical pressure filter flushing
- Selection: Spraying mixture container filling, cleaning, external pressure output, illuviation valve, circulation/spraying/stirring,
- Suction side of spraying mixture container or fresh water tank
- Filling the fresh water tank

Follow the *Terminal operating instructions* regarding the exact operation of the external control terminal.

Switch-over ball valves

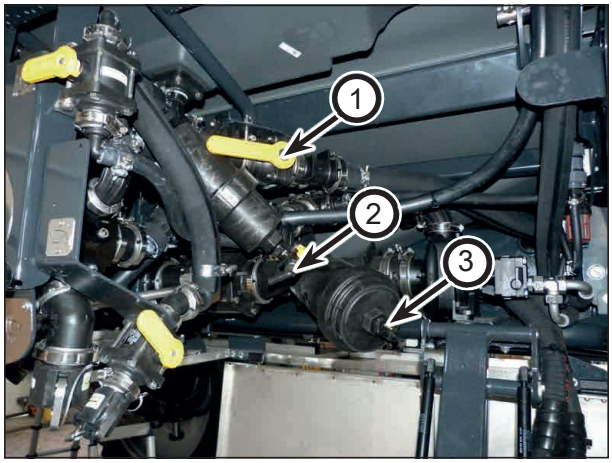

1 Pressure filter locking lever
2 Pressure filter flushing drain
3 Suction filter drain valve

Water system CCS Pro

Ports

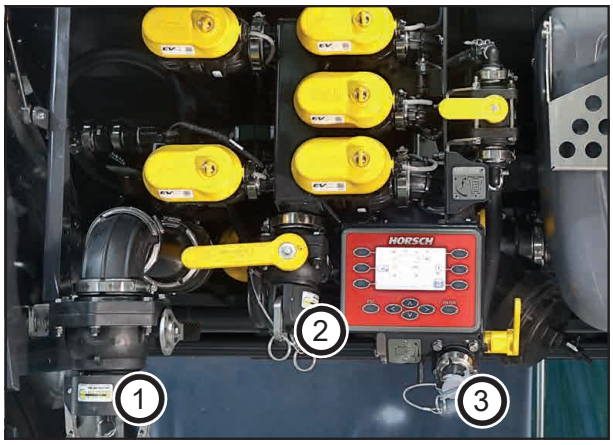

1 Direct filling, spraying mixture container residue drain
2 Spraying mixture container pressure output
3 Filling port for fresh water tank

External control terminal

External control terminal

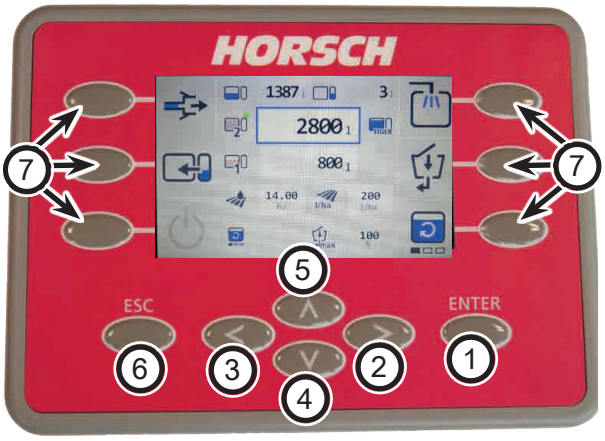

1 Confirm and accept changed value
2 Next page
3 Previous page
4 Navigate down in operating screen
5 Navigate up in operating screen
6 Leave area without saving
7 Selecting the outer areas of the operating screen

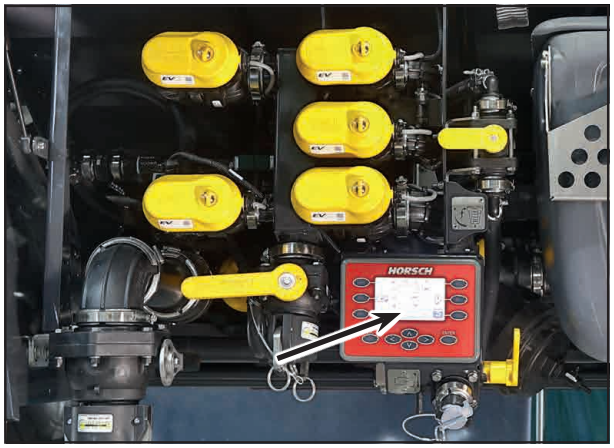

External control terminal

The following functions are operated via the keys on the external control terminal.

- Circulation off
- Suction, stirring, illuviation valve, pulling suction, wash program, pressure information, fresh water recirculation, high pressure cleaner/outside cleaning, winter storage
- Refer also to the information in the terminal operating instructions.

The following functions can be operated via the switch-over ball valves:

- Switching between internal and outside cleaning
- Pressure filter flushing intensity with mechanical pressure filter flushing
- Selection: Spraying mixture container filling, cleaning, external pressure output, illuviation valve, circulation/spraying/stirring,
- Suction side of spraying mixture container or fresh water tank
- Filling the fresh water tank

Follow the *Terminal operating instructions* regarding the exact operation of the external control terminal.

Switch-over ball valves

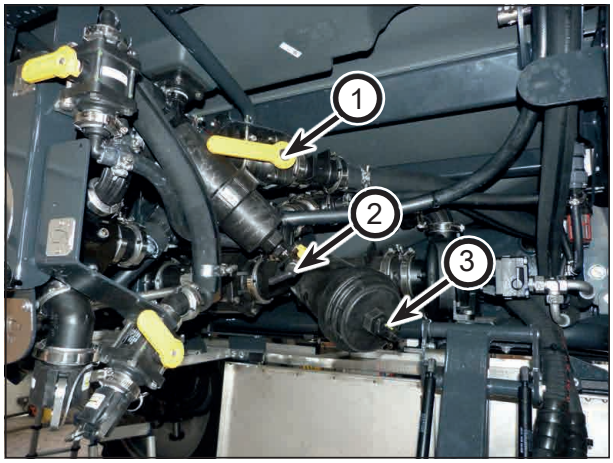

1 Pressure filter locking lever
2 Pressure filter flushing drain
3 Suction filter drain valve

Basic agitator

The spraying mixture container is equipped with a hydraulic agitator. Special injector nozzles in the agitator tube reinforce the stirring intensity. The switched-on agitator mixes the spraying mixture inside the spraying mixture container and thus generates a homogeneous mixture.

The agitator can be set to circulation/spraying/stirring (2) via the pressure side switch-over ball valve (1).
The intensity of the agitator is adjusted via the valve (3).
In addition, the spraying mixture can be kept homogeneously during circulating / spraying and road travel.

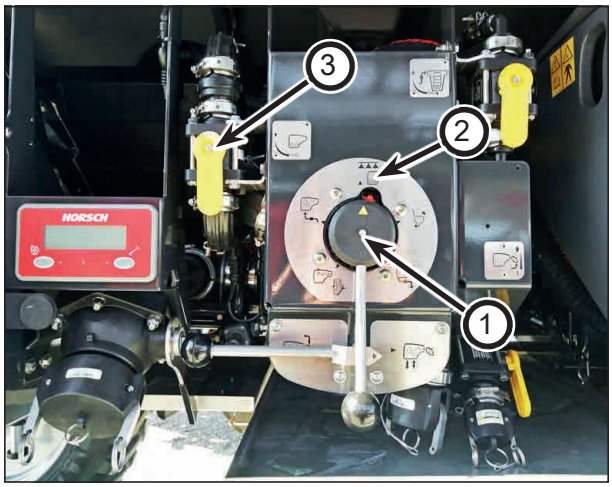

Agitator position

To minimise the residual quantity in the spraying mixture container, the agitator can also be completely disabled.

CCS agitator

The spraying mixture container is equipped with a hydraulic agitator. Special injector nozzles in the agitator tube reinforce the stirring intensity. The switched-on agitator mixes the spraying mixture inside the spraying mixture container and thus generates a homogeneous mixture.

The agitator can be set to circulation/spraying/stirring (2) via the pressure side switch-over ball valve (1).
The intensity of the agitator is adjusted via the valve (3).
In addition, the spraying mixture can be kept homogeneously during circulating / spraying and road travel.

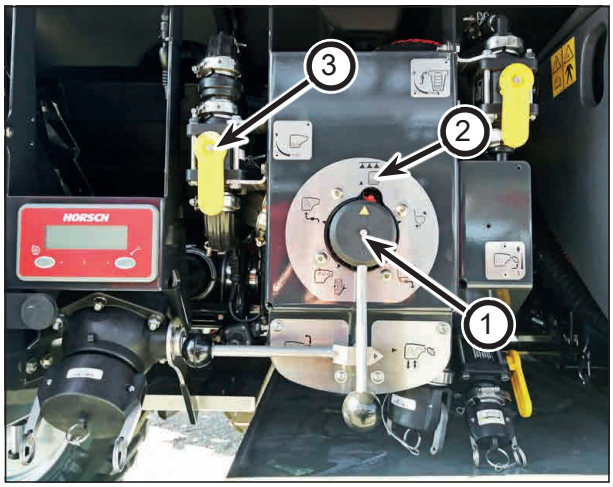

Agitator position

To minimise the residual quantity in the spraying mixture container, the agitator can also be completely disabled.

Basic Pro agitator

The spraying mixture container is equipped with a hydraulic agitator. Special injector nozzles in the agitator tube reinforce the stirring intensity. The switched-on agitator mixes the spraying mixture inside the spraying mixture container and thus generates a homogeneous mixture.

The agitator can be operated via the external control panel or the main terminal.
The intensity of acceleration can thus be set. In addition, the spraying mixture can be kept homogeneously during circulating / spraying and road travel.

External control panel

To minimise the residual quantity in the spraying mixture container, the agitator can also be completely disabled.

CCS Pro agitator

The spraying mixture container is equipped with a hydraulic agitator. Special injector nozzles in the agitator tube reinforce the stirring intensity. The switched-on agitator mixes the spraying mixture inside the spraying mixture container and thus generates a homogeneous mixture.

The agitator can be operated via the external control panel or the main terminal.
The intensity of acceleration can thus be set. In addition, the spraying mixture can be kept homogeneously during circulating / spraying and road travel.

External control panel

To minimise the residual quantity in the spraying mixture container, the agitator can also be completely disabled.

Folding boom

Proper condition of spraying boom and suspension have a considerable influence on the distributing accuracy for the spraying mixture.
Complete wetting is achieved by correctly adjusted spraying height of the folding boom to the crop.

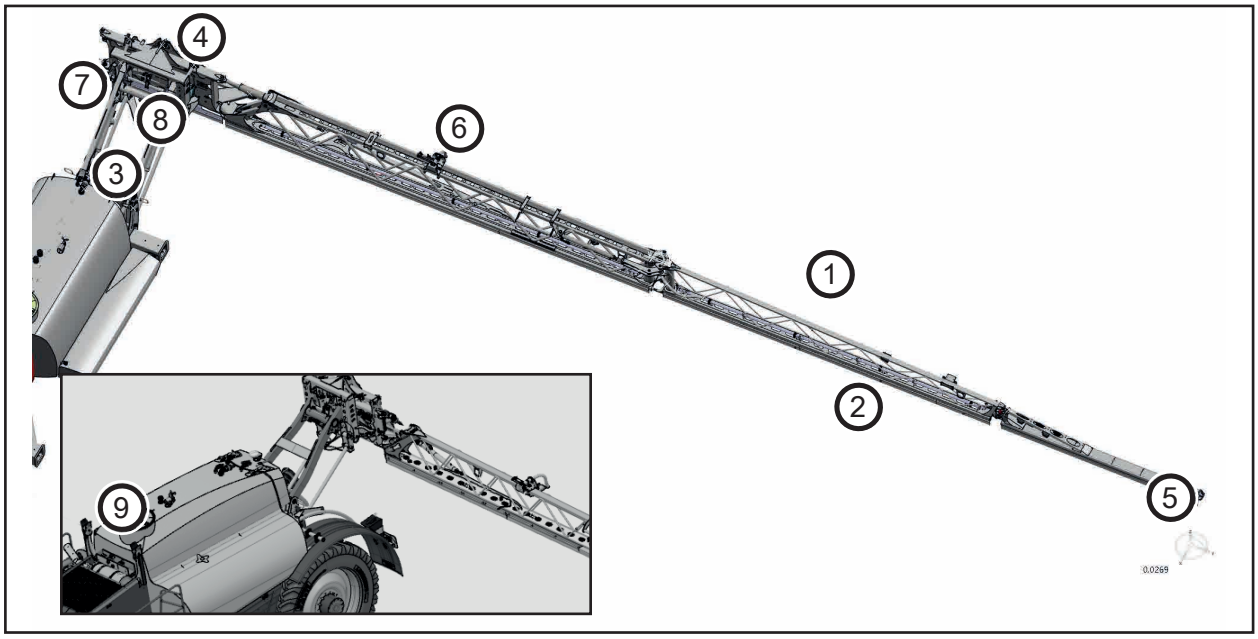

1 Spraying boom with spraying lines
2 Nozzle protection tube
3 Parallelogram
4 Middle section
5 Collision protection
6 Folding boom lock
7 Parallelogram lock
8 Slope compensation
9 Folding boom rest

⚠ WARNING

Staying under the raised folding boom is prohibited!
Danger of crushing and impact for persons when lifting or lowering for height adjustment of the spraying boom!
Instruct persons to leave the danger zone around the machine before lifting or lowering the spraying boom by means of the height adjustment.

⚠ NOTE

Adjust the spraying height (distance between nozzles and crop) as per currently applicable guidelines.

Always adjust the spraying boom parallel to the ground, because the specified spraying height can only be achieved in this condition.

Carry out all adjustment work on the spraying boom conscientiously.

Folding variants

Folding boom, 5-piece with reduced working width 17 m

17 m [55 ft]

30/36 m 100 ft / 120 ft

NOTE

With a 5-piece folding boom 17/36, partial folding is not possible.

BoomControl

⚠ WARNING

Danger caused by unexpected movements in automatic mode. Never come close to the ultrasonic sensor, while the BoomControl is in automatic mode!

During spraying operation under high voltage power lines disable the BoomControl and operate the slope compensation manually!

No persons may be present under the folding boom and in the danger zone!

The BoomControl function must be disabled when leaving the cabin!

The BoomControl folding boom control is used for the automatic distance control of the spraying boom.
Ultrasonic sensors measure the distance to the ground or the crop and the folding boom is then adjusted in accordance with the nominal distance values. An automatic height and inclination control thus adapts the folding boom distance to the crop. The crop should be closed and not show any gaps.

The scanning width of a sensor is approx. 0.5 m [7 in]. If a gap in the crop or a trench wider than 0.5 m [7 in] is detected under the sensor, the corresponding folding boom segment will be lowered (danger of damages).
When passing over exceptionally smooth surfaces, such as e.g. water puddles, the ultrasonic signal may be reflected. The control must in these areas be deactivated.

- BoomControl does not relieve the driver from his responsibility to constantly check the position of the folding boom and to interfere manually, if needed!

The folding boom can be equipped with up to 6 sensors for height adjustment and slope compensation.

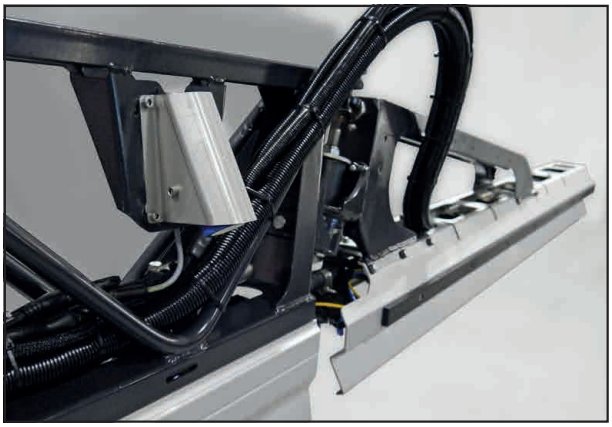

Ultrasonic sensor on the folding boom

⚠ NOTE

When the spraying boom is switched off at the headland, the spraying boom is automatically raised by a previously defined value.
When switched back on, the spraying boom will return to its set height.

BoomControl modes

Various equipment versions are available. Depending on the mode, there are different designs.

BoomControl
Design with 2 or 4 sensors for height adjustment and slope compensation.

BoomControl PRO
Design with 4 or 6 sensors for height adjustment, slope compensation and angle adjustment.

BoomControl PRO Plus
Design with 6 sensors for height adjustment, slope compensation and angle adjustment of the outside wings.

⚠ NOTE

In case of irregular population and/or empty spaces in the population, the folding boom control must be deactivated or manually overridden to avoid unintended lowering of the folding boom!

BoomControl Pro (optional)

Automatic folding boom control with active adjustment by the sensors on the folding boom wings. This ensures minimum drift at the lowest possible working height, even at high speeds, on flat or slightly hilly terrain.

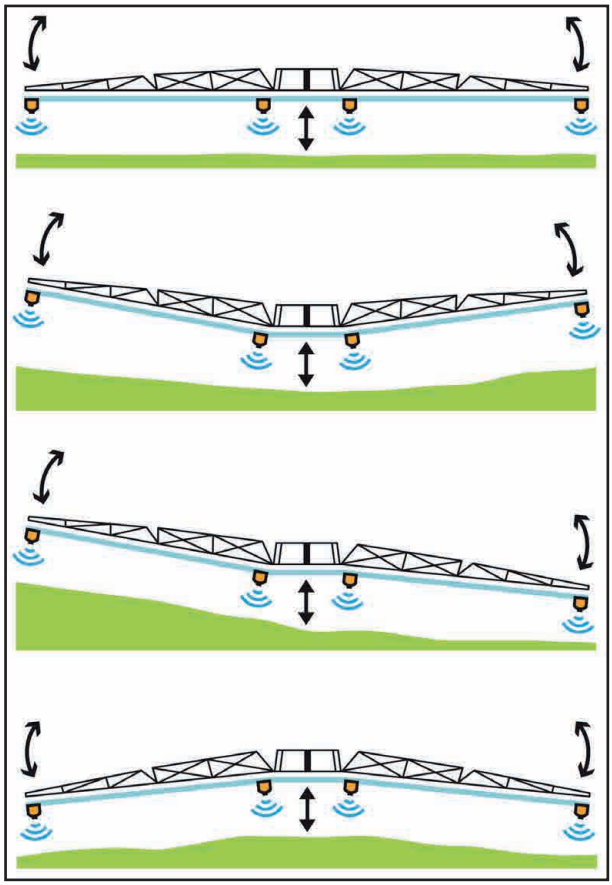

Active adaptation of the folding boom via middle section height guidance and independent bending of both folding boom halves (controlled by 4 sensors, distributed over the entire folding boom).

Transport lock

⚠ WARNING

The folding boom package must be locked and checked during each road travel!

Folding boom lock

The folding boom lock is used to lock the folded folding boom during road travel. It prevents accidental unfolding.

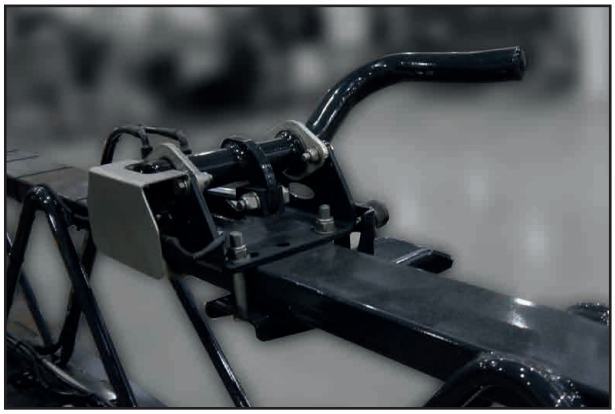

Folding boom lock open

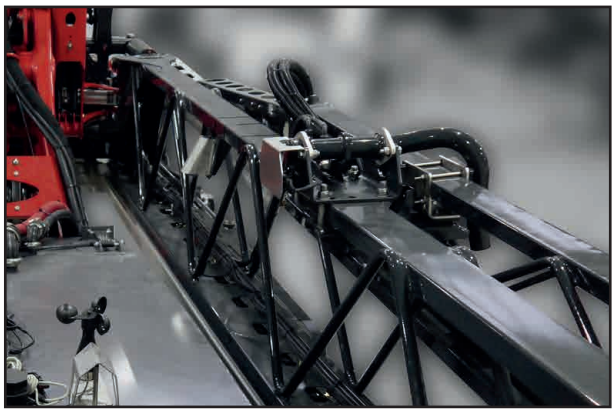

Folding boom lock closed

Folding boom rest

The folding boom rest is used to rest the folded folding boom during road travel and prevents accidental unfolding.

Bow for folding boom rest

Folding boom rest

Folding boom put down

Parallelogram lock

The stroke of the parallelogram must always be locked during road travel. The parallelogram is locked automatically as soon as the folded folding boom is in the end position of the rest.
When the folded folding boom is lifted from the rest, the parallelogram is first unlocked automatically.

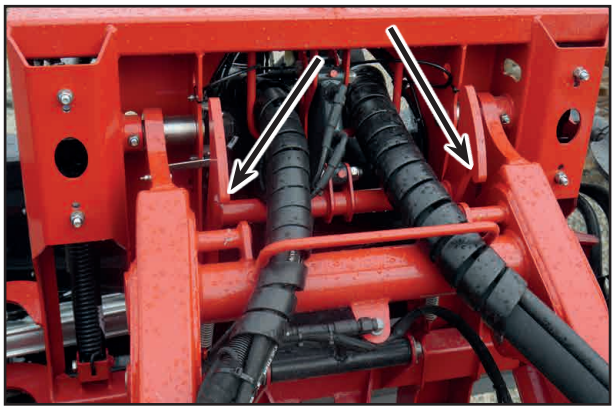

Parallelogram interlock open (sample figure)

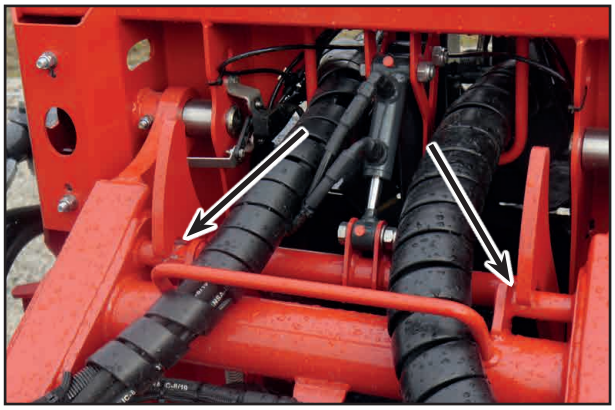

Parallelogram interlock locked (sample figure)

Slope compensation

The folding boom is aligned horizontally via the slope compensation.
If the terrain is uneven, the centre of gravity of the folding boom can be changed using the hydraulic slope compensation (1). Changing the centre of gravity allows the folding boom to be positioned parallel to the ground on a slope.
The slope compensation must always be locked before road travel.
Slope compensation is locked automatically as soon as the folding boom is folded.
When unfolding the folding boom, the slope compensation is unlocked automatically after successful folding.

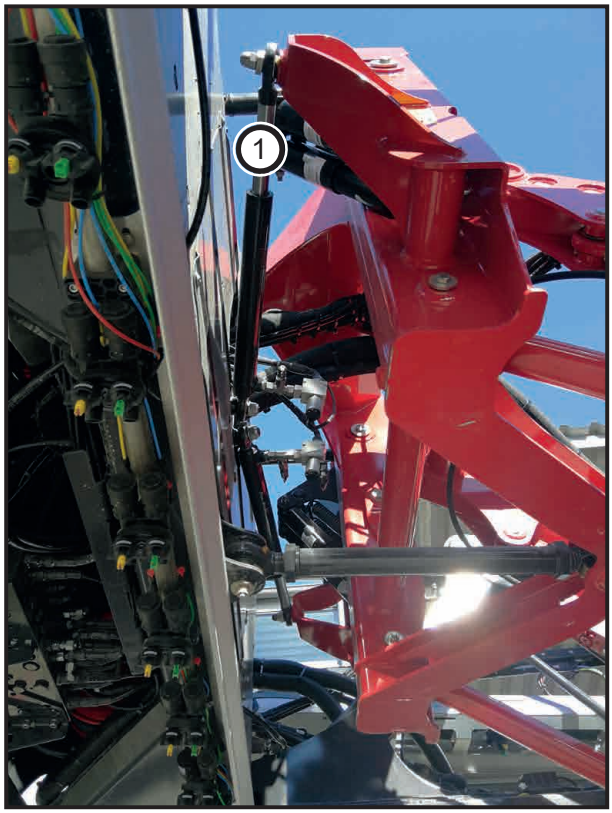

The slope compensation consists of two hydraulic cylinders that are locked or unlocked via lock valves.

Uniform transverse distribution is only achieved with the slope compensation unlocked.

NOTE

Before starting road travel make sure that the folding boom is locked and rests securely in the folding boom rest. In addition, the parallelogram and the slope compensation must be locked.

Collision protection

The collision protection protects the folding boom against damage caused by collision with a solid obstacle. The joint mechanism enables escaping a collision in travel direction and in opposite direction.

Sample figure

After the escape movement the collision protection will swing back to the initial position.

NOTE

Collision protection only with fully extended working width. With reduced working width pay attention to any obstacles around the outside of the machine!

Spraying line

The spraying line is made of stainless steel pipe. The nozzle control has been designed as pneumatic single nozzle control for all versions. Section separation is achieved by combining the control of several nozzle bodies.

The spraying line can be fitted with single or multiple nozzle bodies.

Circulation system

Due to the permanent circulation of the biocatalytic solution through the complete folding boom while the sprayer is switched off, spraying fluid is permanently applied to the nozzle.
When switching on individual sections or the entire spraying line for the first time, the biocatalytic solution is directly and well mixed available. This circulation successfully prevents the formation of deposits and blockage.

Cleaning of nozzle pipe and nozzles

The spraying line is cleaned by the circulation system. The suction side of the crop protection sprayer is set to fresh water for this purpose. The nozzle line is flushed with fresh water.
To clean the nozzles, all nozzles must be open for approx. 3 sec.

Circulation

PS = Pressure supply RT = Return spraying mixture container

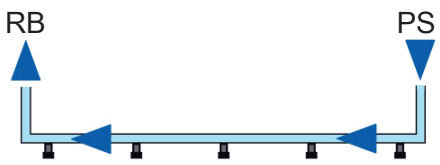

Folding boom left

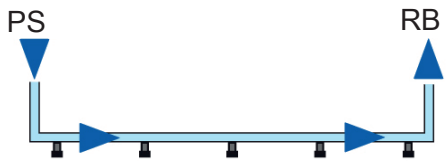

Middle section/folding boom right

Spraying

PS = Pressure Supply

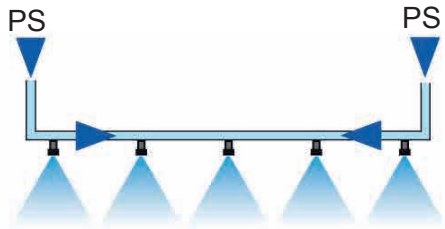

Folding boom left

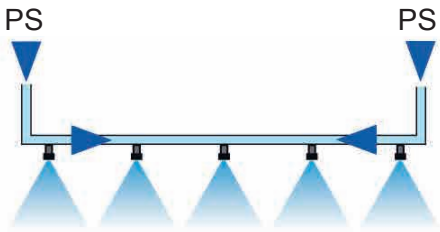

Middle section/folding boom right

Nozzle body

Single nozzle body with pneumatic control valve

If a pressure of more than 4 bar is applied to the compressed air connection (4), the valve will open and fluid can flow out. Without pressure the valve is closed.

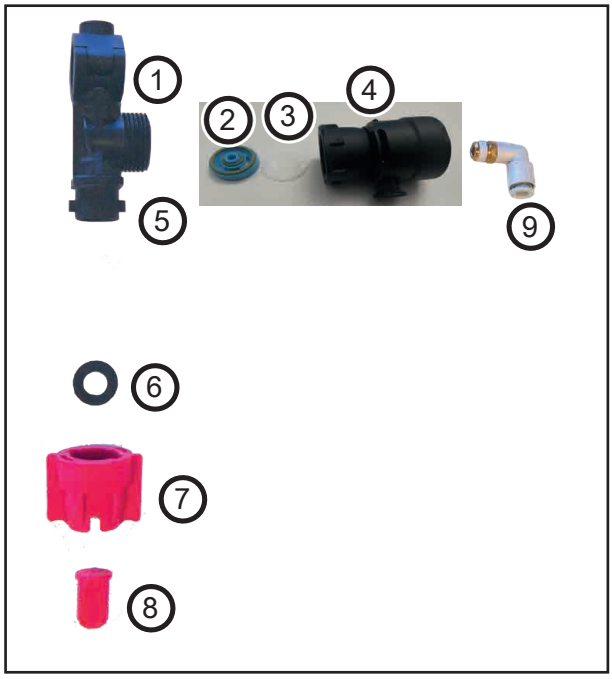

1 Nozzle body
2 Seal attachment
3 Diaphragm
4 Pneumatic control valve
5 Bayonet connection
6 Rubber seal
7 Bayonet cap
8 Nozzle
9 Compressed air connection

New control valve must be installed with all nozzle bodies.

Multiple nozzle body manual triple

The triple nozzle body is used if more than one nozzle type is used. Only the vertically arranged nozzle will be supplied.
By turning the nozzle body, another nozzle is brought into use.
In intermediate positions the nozzle body is switched off.

⚠ NOTE

Flush the spraying lines and the active nozzle before turning the triple nozzle body to another nozzle type!

Fluid always escapes on all vertical nozzles. If a pressure of more than 4 bar is applied to the compressed air connection (4), the valve will open and fluid can flow out. Without pressure the valve is closed.

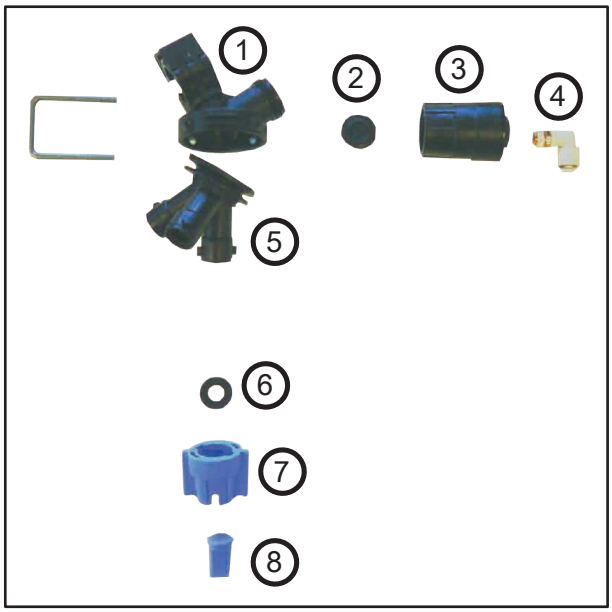

1 Nozzle body
2 Diaphragm
3 Pneumatic control valve
4 Compressed air connection
5 Bayonet connection
6 Rubber seal
7 Bayonet cap
8 Nozzle

Multiple nozzle body pneumatic

These multiple nozzle bodies are installed in the form of dual or quadruple versions.
In this case it is possible to switch the desired nozzle from the terminal. You may even switch on several nozzles at a time. The pneumatic control valves are integrated in the nozzle carrier. If a pressure of 4 bar is applied to the compressed air connection (4), the valve will open and fluid can escape. Without pressure the valve is closed.

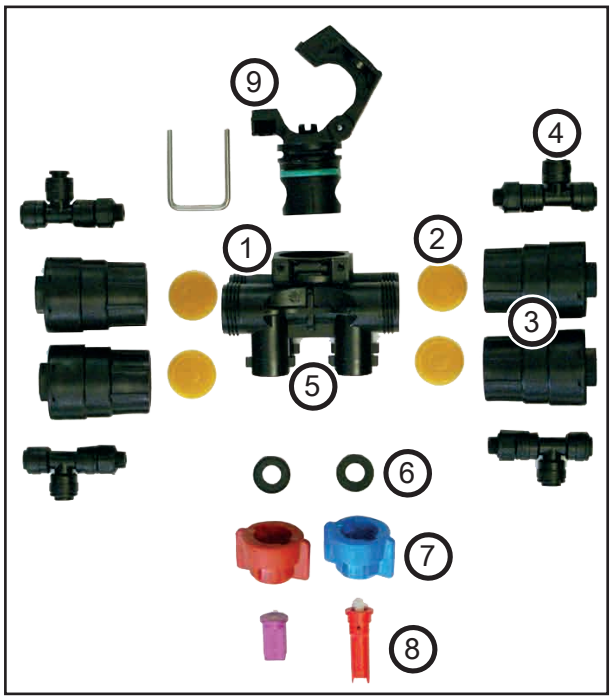

1 Nozzle body
2 Diaphragm
3 Pneumatic control valve
4 Compressed air connection
5 Bayonet connection
6 Rubber seal
7 Bayonet cap
8 Nozzle
9 Hinged clamp

Multiple nozzle body manual quadruple

The 4-fold nozzle body is recommended if more than only one nozzle type is used. Only the two vertical nozzles will be supplied. They can be activated individually via the terminal.
By turning the nozzle body, the other two nozzles are used.
In intermediate positions the nozzle body is switched off.

NOTE

Flush the spraying lines and the active nozzle before turning the 4-fold nozzle body to another nozzle type!

Fluid always escapes on all vertical nozzles. If pressure greater than 4 bar is applied to the compressed air connection (4), the valve will open and fluid can escape. Without pressure the valve is closed.

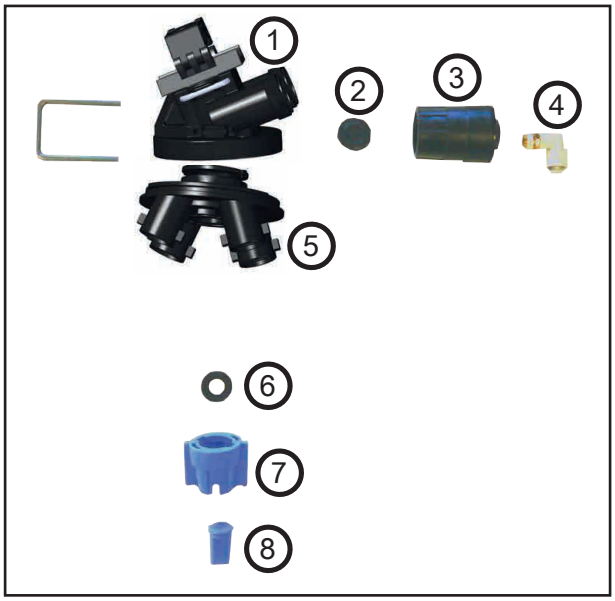

1 Nozzle body
2 Diaphragm
3 Pneumatic control valve
4 Compressed air connection
5 Bayonet connection
6 Rubber seal
7 Bayonet cap
8 Nozzle

Nozzle assembly and cleaning

Nozzle assembly

⚠ CAUTION

CAUTION Spraying mixture running out!
Use appropriate protective outfits. Catch spraying mixture in a suitable container and dispose of it.

1. Insert the nozzle (8) into the bayonet cap (7).
2. Insert the rubber seal (6) above the nozzle (8).
3. Press the rubber seal (6) into the seat of the bayonet cap (7).
4. Position the bayonet cap (7) on the bayonet connection (5).
5. Twist the bayonet cap (7) against the stop position.

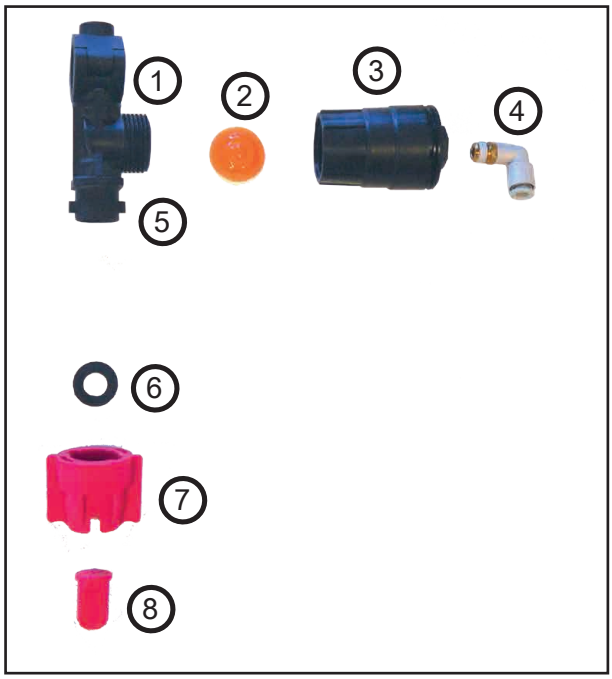

⚠ NOTE

Observe the correct installation of the nozzle during assembly! Observe the specifications of the nozzle manufacturer.

Nozzle replacement

- Turn the nozzles each by approx. 45° (to end position) to remove and install them.
- Use the delivered tool for this purpose:

Cleaning nozzles

- Clean the nozzles, if required.
- Do not damage nozzles and nozzle filters when cleaning.

⚠ CAUTION

CAUTION Spraying mixture running out!
Never blow out the nozzles with your mouth.

Removing the diaphragm valve on dripping nozzles

Deposits on the diaphragm seat are the cause of nozzles dripping after the folding boom has been switched off.

In this case clean the corresponding diaphragm as follows:

1. Unscrew the pneumatic control valve (3) from the nozzle body (1).
2. Take out the diaphragm (2).
3. Clean the diaphragm seat.
4. Insert the diaphragm (2) again in the pneumatic control valve (3).
5. Screw the pneumatic control valve (3) again on the nozzle body (1).

⚠ CAUTION

CAUTION Spraying mixture running out!
Use appropriate protective outfits. Catch the spraying mixture in a suitable container and dispose of it properly.

Pulse width modulation (PrecisionSpray)

Pulse width modulation (PWM) is used to regulate the wash more precisely. The flow rate is thereby regulated by rapid opening and closing of electrically controlled nozzle valves. As a result, different quantities at the same pressure and the same drop size are placed with the same spraying nozzle. The application quantity remains unchanged.

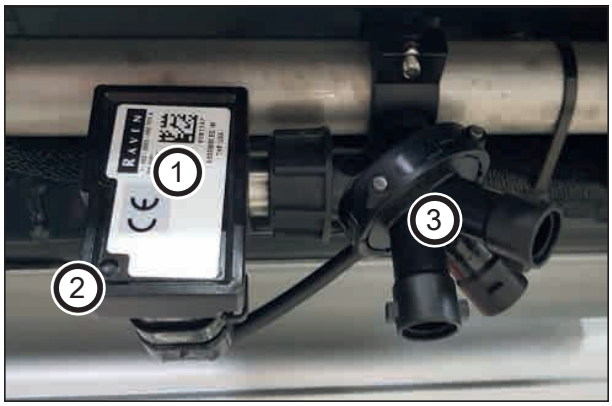

1 Pulse nozzle switching valve
2 Status light
3 Nozzle carrier

Pulse width modulation is possible with the following nozzle controls:

- 1-0 with triple nozzle body, manually
- 1-1 with triple nozzle body, manually

Design of pulse nozzle switching valves

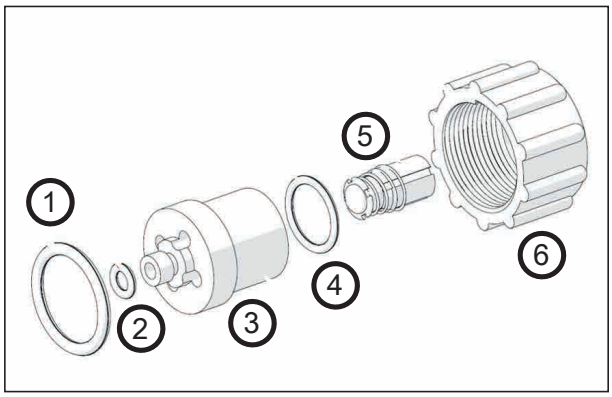

1 O-ring
2 Outlet seal
3 Valve body
4 O-ring
5 Valve piston with closing spring
6 Locking cap

Maintenance

Valve piston (5) new (left), worn (right)

NOTE

Replace worn valve pistons every 500 h or as needed according to manufacturer's specifications!
Always use an auxiliary pressure filter when additives, such as salts, are placed to protect the valve piston from foreign objects.

Clean the pulse nozzles regularly, especially when using powdery crop protection agents. To clean the nozzles, disconnect and open them using the tools supplied in the accessories pack (Art. No. 60009829).

Opening the nozzle control valves

Examples of nozzles and travel speeds

Example 1: Nozzle control 1-0 (division of 50, nozzle Lechler IDKT 12005, 3 bar [44 psi]):

Application quantity: 150 l/ha [16 gal/ac]
Travel speeds: from 4.8 to 15.8 km/h [3 to 9.8 mph] at the same pressure and the same placing quantity.

Application quantity: 200 l/ha [21 gal/ac]
Travel speeds: from 3.6 to 11.8 km/h [2.2 to 7.3 mph] at the same pressure and the same placing quantity.

At 10 km/h [6.2 mph] application quantities between 72 l/ha [8 gal/ac] and 240 l/ha [26 gal/ac] can be realised.

Example 2: Nozzle control 1-0 (division of 50, nozzle Teejet AIC 11005, 4 bar [58 psi])

Application quantity: 150 l/ha [16 gal/ac]
Travel speeds: from 5.4 to 18 km/h [3.3 to 11 mph] at the same pressure and the same placing quantity.

At 10 km/h [6.2 mph] application quantities between 80 l/ha and 270 l/ha [9 and 29 gal/ac] can be realised.

Example 3: Nozzle control 1- 1 (division of 25, nozzle Teejet AIC 1105 and Lechler IDKT 12005 in mixed crops, 3 bar [44 psi])

Application quantity: 200 l/ha [21 gal/ac]
Travel speeds: from 7.2 to 23.6 km/h [4.5 to 15 mph] at the same pressure and the same placing quantity.

Application quantity: 300 l/ha [32 gal/ac]
Travel speeds: from 4.8 to 15.8 km/h [3 to 9.8 mph] at the same pressure and the same placing quantity.

At 14 km/h [8.7 mph] application quantities between 100 l/ha and 340 l/ha [10.7 and 36 gal/ac] can be realised.

Optional equipment

GPS receiver (optional)

The description applies to the GPS receiver version of Müller Elektronik A101. Additional versions of other manufacturers may deviate.

Description

The GPS receiver serves to determine the exact position of the machine.

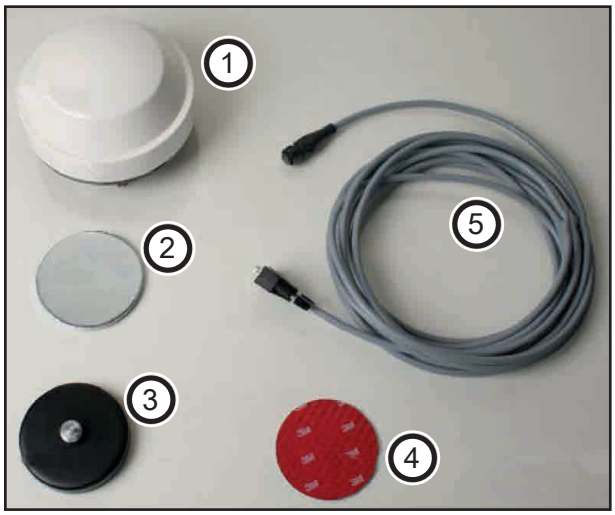

1 GPS receiver
2 Metal plate
3 Magnetic base
4 Self-adhesive plate
5 Connecting cable

Meaning of the LED light

The GPS receiver indicates the quality of the connection via a status LED:

- Red: The GPS receiver is connected to the terminal but cannot receive a GPS signal
- Orange: The GPS receiver can receive GPS signals but the differential signal is absent. Accuracy is therefore very low.
- Green: The GPS receiver receives GPS signals and differential signals.

Installation

⚠ CAUTION

Risk of crushing from very powerful magnet on the base of the GPS receiver!
When installing the GPS receiver, hold it firmly with both hands to make sure no fingers get between the magnetic base of the GPS receiver and a metal surface!

⚠ NOTE

The GPS receiver requires unobstructed view of the sky!
Mount the GPS receiver on the spraying mixture container of the crop protection sprayer. A pre-installed bracket is available there for the GPS receiver.
Shadowing of the GPS receiver is to be avoided.

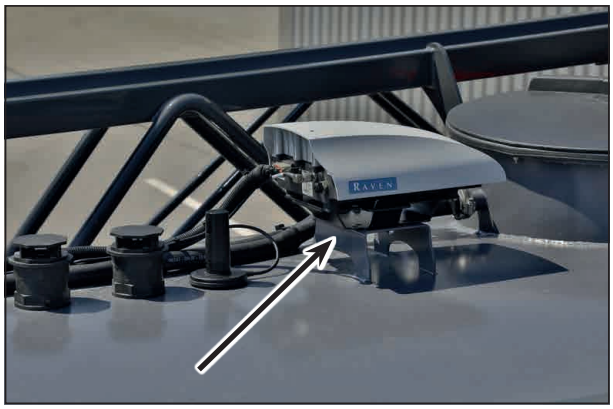

GPS-receiver bracket

Assembly accessories

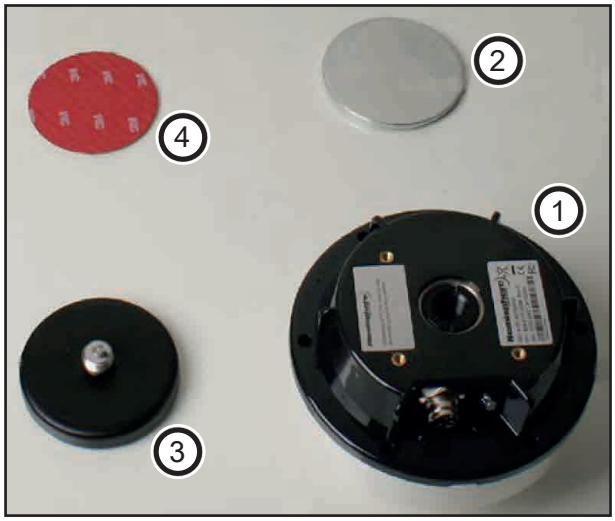

1 GPS receiver
2 Metal plate
3 Magnetic base
4 Self-adhesive plate

1. Thoroughly clean the location where the GPS receiver shall be mounted with alcohol.
   - ➢ Installation on the fresh water tank
2. Glue the double-sided self-adhesive plate (4) on the cleaned surface.
3. Clean the metal plate (2).
4. Pull the paper off the self-adhesive plate (4) and glue the metal plate (2) onto it.
5. Screw the magnetic base (3) into the GPS receiver (1).
6. Position the GPS receiver (1) with the magnetic base on the metal plate (2).

GPS receiver mounted on spraying mixture container

Connecting the GPS receiver to the terminal

⚠ CAUTION

The plug of the terminal carries voltage. Damages to the terminal may occur from a short-circuit. Switch off the terminal before connecting the connecting cable of the GPS receiver to it!

1. Switch off the terminal.
2. Route the connecting cable of the GPS receiver into the vehicle cabin.
3. Connect the connecting cable to the RS232 port on the terminal.
   - ➢ For more information about the fitting connection, refer to the HORSCH Terminal TOUCH 1200 operating instructions.
4. During initial starting it may take up to 30 minutes until the GPS receiver has reception. For all other starts it will only take approx. 1 - 2 minutes.

⚠ NOTE

Information on the configuration of the GPS receiver is provided in the HORSCH brief instructions GPS Setting.

Technical data

Features

Operating voltage	7 - 36 VDC
Current consumption	249 mA at 12 VDC
Power consumption	< 3 W at 12 VDC
GPS Standard	NMEA 0183

Configuration

Frequencies	5 Hz (GPGGA, GPVTG)
	1 Hz (GPGSA, GPZDA)
Transfer rate	19200 Baud
Data bits	8
Parity	no
Stop bits	1
Flow control	none

When installing the GPS receiver, the geometric data from the following table must be entered.

Vehicle / GPS antenna calibration

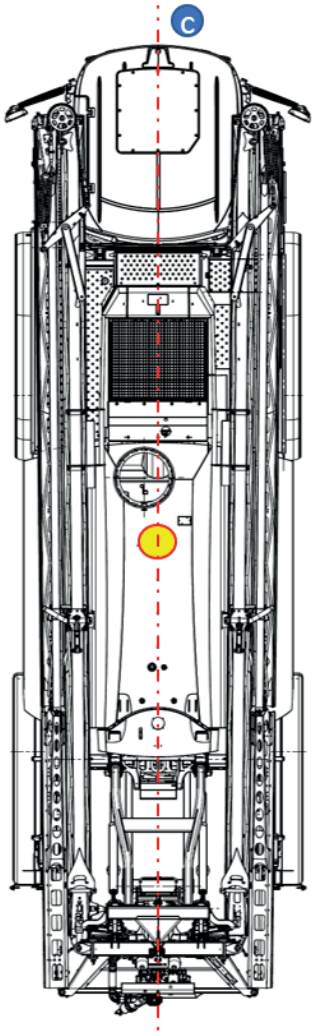

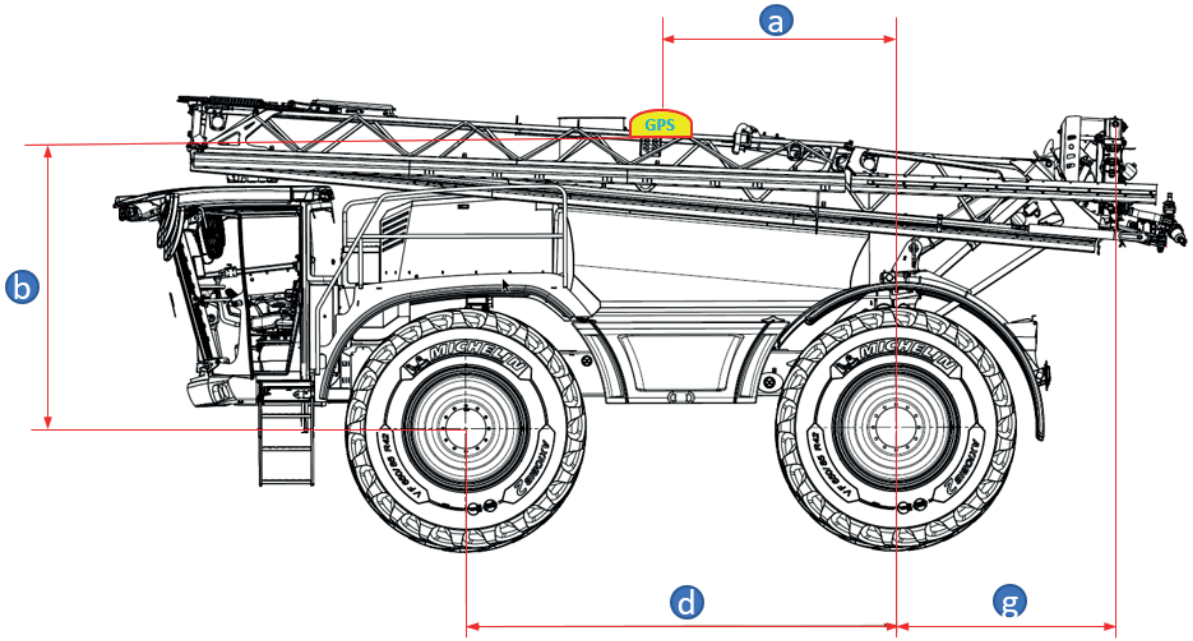

With standard tyres
VF520/85 R46
f (Tyre radius 915 mm)

e Track width

HORSCH

Machine	Type of tank	Distance of rear axle to GPS receiver (a) mm	Distance of centre of axle to GPS receiver (b) mm	Lateral offset (c) mm	Wheel base (d) mm	Track width (e) mm	Tyre radius for tyres mm VF 520/85 R46 (f)	Distance of rear axle to folding boom wing connection mm (g)
5.280 VL	PE*	2543	2641	0	4300	3000**	906	2147
	FA	2543	2627	0	4300	3000 **	906	2147
5.300 VL	PE	2543	2641	0	4300	3000**	906	2147
	FA	2543	2627	0	4300	3000**	906	2147
6.280 VL	PE	2543	2827	0	4300	3000**	906	2147
	FA	2543	2777	0	4300	3000**	906	2147
6.300 VL	PE	2543	2827	0	4300	3000**	906	2147
	FA	2543	2777	0	4300	3000**	906	2147
8.280 VL	FA	2543	2852	0	4300	3000**	906	2147
8.300 VL	FA	2543	2852	0	4300	3000**	906	2147
5,280 VN	PE	2543	2641	0	4300	3000***	906	2147
	FA	2543	2627	0	4300	3000**v	906	2147
5,300 VN	PE	2543	2641	0	4300	3000***	906	2147
	FA	2543	2627	0	4300	3000***	906	2147
6,280 VN	PE	2543	2827	0	4300	3000***	906	2147
	FA	2543	2777	0	4300	3000***	906	2147
6,300 VN	PE	2543	2827	0	4300	3000***	906	2147
	FA	2543	2777	0	4300	3000***	906	2147

*PE = plastic tank; VA = stainless steel tank
**Track width 2.60 m - 3.50 m or 3.00 m - 4.10 m
***Track width 2.50 m - 3.00 m

Edge and border nozzles

Each folding boom has a border and an edge nozzle. They are located 10 cm outside of the last main nozzle.

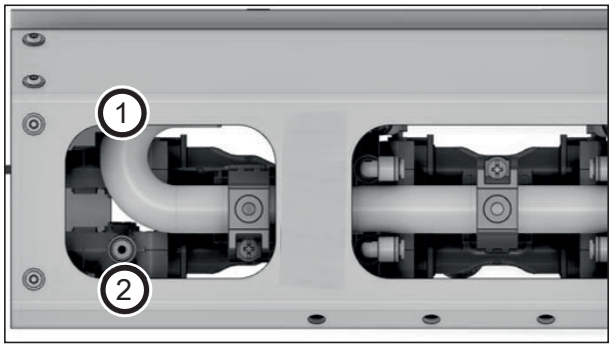

Border and edge nozzle

1 Front border nozzle direction of travel
2 Rear edge nozzle direction of travel

➢ A border nozzle can always be activated in addition via the terminal. All main and auxiliary nozzles remain in use.

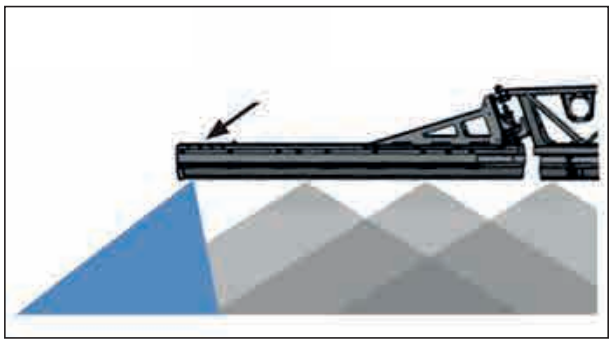

Border nozzle

➢ If an edge nozzle is activated via the terminal,

- with 1-fold nozzle bodies, level 1 of the first or last main nozzle is switched off.
- with 2-fold nozzle bodies, levels 1 and 2 of the first or last main nozzle are switched off.
- with 4-fold nozzle bodies, levels 1 and 2 of the first or last main nozzle are switched off.

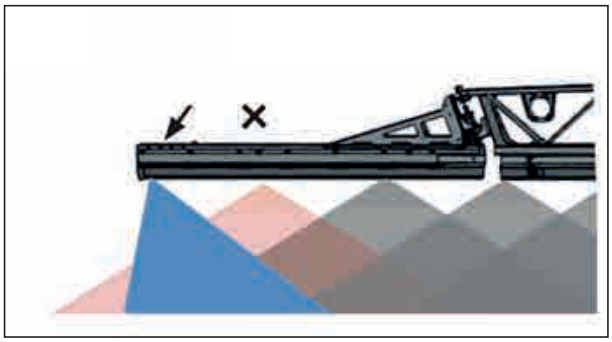

Edge nozzle

Example: When an edge nozzle is activated, the first blue and the first yellow nozzle are automatically switched off.

NightLight (optional)

Extremely bundled light (LED spotlight) to illuminate the spraying cones.
When the spraying process is switched off at the headland the lights are automatically cleaned by a washing facility.
The LED spotlights are controlled via the terminal.

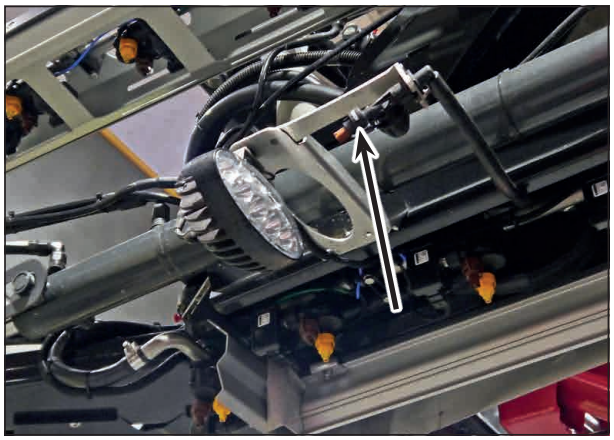

NightLight with cleaning nozzle (figure similar)

The cleaning cycle can be set as to whether it shall be run. If the cleaning cycle is activated, cleaning is automatically enabled when switching off the nozzles (e.g. at the headland). With each cycle the pump sucks in fresh water through a filter for approx. 4 seconds. At this, the pump delivers approx. 0.4 litres of fresh water with approx. 2.5 bar to the cleaning nozzle.

The filter is located behind the illuviation valve.

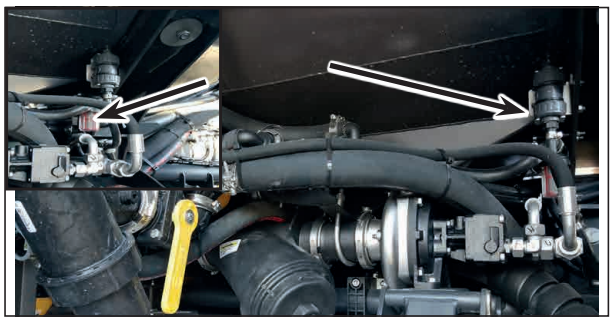

Filter NightLight cleaning

The pump is located behind the illuviation valve next to the filter.

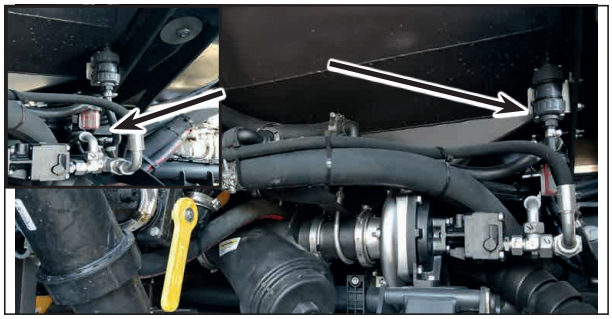

Pump NightLight cleaning

NOTE

The cleaning cycle can also be activated in the daytime when the NightLight is switched off. This avoids deposits on the spreading disc also during daytime.

Direct filling (optional)

Direct filling without pump

At the direct filling port fluid from an external tank can be pressed directly into the spraying mixture container. It is installed at the right side of the machine in the front and next to the cabin. Optionally, a control terminal can be installed where the level of the spraying mixture container can be read.

Direct filling connection

Direct filling with pump

At the direct filling port, fluid can be sucked into the spraying mixture container. It is installed at the right side of the machine in the front and next to the cabin. The filling pump can be started/ stopped via the control terminal.

Direct filling connection with pump and filter (optional)

NOTE

The wet seal chamber for the radiator antifreeze must always be filled with coolant at least to 3/4. Make sure that the seal is completely covered with coolant.
The chamber of the pump wheel must be filled with water. The pump will not be able to suction if it is not filled with water.
Daily check the coolant and water level and replenish as needed.

Wind meter (optional)

A wind meter can be mounted on the top side of the spraying mixture container. It provides current values on wind speeds. Drifting can thus be prevented to reach optimal treatment success of the crop protection measure.
The current values can be read on the terminal.

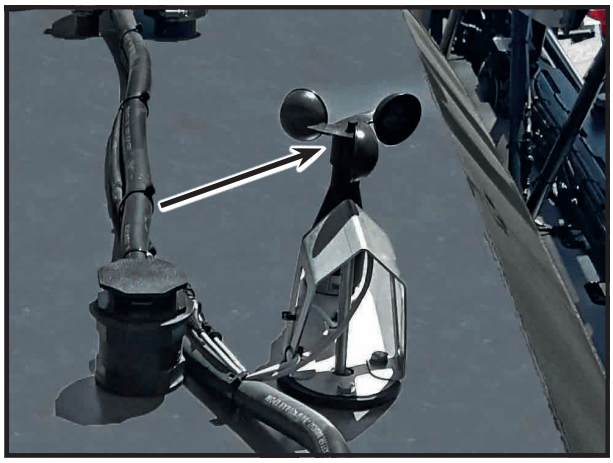

Wind meter

Outside cleaning (optional)

⚠ NOTE

Wash the machine for the first time after 3 months at the earliest with a steam jet or high pressure cleaner to avoid damage to the paintwork.
Keep a distance of at least 150 cm from electronic components, terminals, electronic ports to the cabin or sensors with a water jet.
After cleaning, check the hydraulic lines for leaks and firm connections. Retighten screw connections if necessary. Relubricate all lubrication points.

With outside cleaning, undesired contamination is removed and the unintentional dripping of adhering crop protection agents is prevented.

⚠ NOTE

Outside cleaning is supplied with fresh water via the centrifugal pump. (With standard water system depending on the valve position)

⚠ WARNING

Danger through accidental contact with spraying mixture!

Wear personal protective outfit!

Before using the outside cleaning system the cleaning programs of the crop protection sprayer must be cycled through since the residual chemical still contained in the water system is pumped off via outside cleaning before fresh water arrives at the cleaning gun.

⚠ CAUTION

Risk of fluids escaping under pressure.
The external cleaning system may be contaminated with spraying mixture deposits!

Secure the washing gun with the lock against accidental spraying:

- before each spraying pause
- before the washing gun is stored again in its holder after cleaning is finished.

⚠ NOTE

- Wear suitable protective outfit when cleaning. Follow the specifications of the crop protection agent manufacturers.
- Cleaning water must not enter surface water or the sewage system.
- Perform cleaning therefore on an unpaved and green area.

With the external cleaning system two optional variants are available:

1/2″ hose with hose reel and washing gun

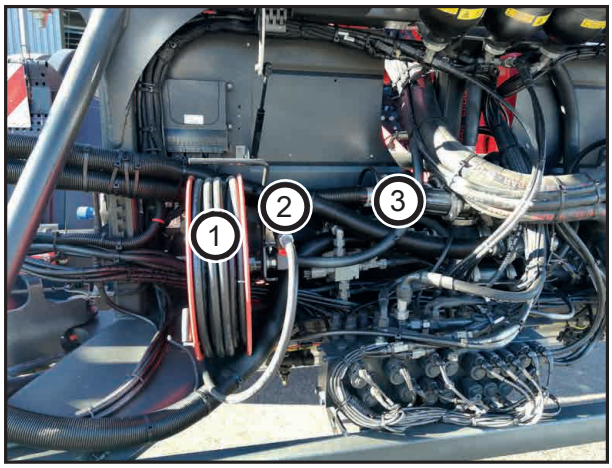

1 Hose reel
2 Pressure hose
3 Washing gun with interlocking

- Water escapes from the washing gun as long as the handle is pressed.
- To fix the handle actuation press the tappet during operation.
- Press the handle to release.
- After switching off relieve the residual pressure.

High pressure cleaner (optional)

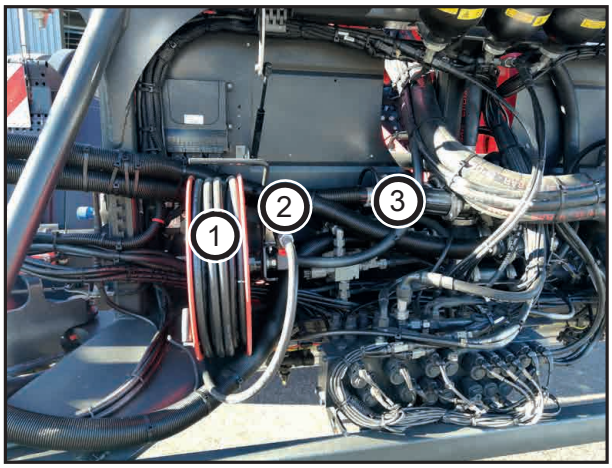

High pressure cleaner

1 Hose reel
2 Pressure hose
3 Washing gun with interlocking

Operating pressure: 150 bar
Water output: 15 l/min

- Water escapes from the washing gun as long as the handle is pressed.
- To fix the handle actuator engage the lock during operation.
- Press the handle to release.
- After switching off relieve the residual pressure.

Oil change

- Use 0.415 kg of “AGIP GAMMA 30” for oil filling.
- First oil change after 1000 operating hours.
- Further oil changes annually or every 1000 operating hours

1. Place a suitable collecting vessel under the drain plug.
2. Carefully unscrew the drain plug.
3. Collect the entire oil and dispose of properly.
4. Screw down the drain plug again.
5. Fill new oil (AGIP GAMMA 30, approx. 0.4 litres) via the filling opening.
6. Check the oil tank for leaks.

N-Sensor bracket (optional)

The bracket for the N-Sensor is located on the front of the cabin roof. The N-Sensor measures the chlorophyll and adjusts the placing quantity accordingly.

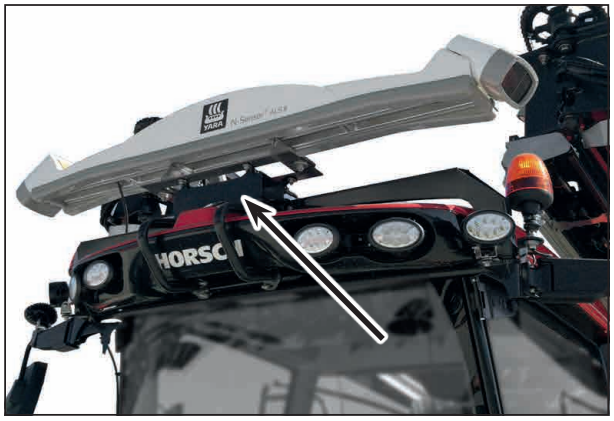

N-Sensor bracket

NOTE

The bracket only fits the Yara-N-Sensor Series ALS.

Safety package (optional)

Warning triangle, safety vest, warning lamp incl. battery and first-aid kit are located in the storage compartment under the driver's seat.

Storage compartment under the driver's seat

Fire extinguisher (optional)

The fire extinguisher is located at the left hand side of the cabin.

Fire extinguisher

Maintenance of the fire extinguisher must be performed according to the national regulations by the customer.

Operation

Whenever working on the machine pay attention to the associated safety notes in the chapter “Safety and prevention of accidents” as well as the accident prevention instructions!

Commissioning

NOTE

Before commissioning the machine, the operator must have read and understood the operating instructions.

NOTE

The machine must comply with the regulations of the national road traffic regulations.
Vehicle owner (operator) as well as driver (operating person) are solely responsible for complying with the statutory regulations of the national road traffic directives.

WARNING

Danger caused by crushing, shearing, cutting, winding up, being pulled in and caught in the area of hydraulically or electrically actuated components.

Do not block any actuators on the machine, which serve the purpose of directly executing hydraulic or electric movements of components. The respective movement must stop automatically once the operator releases the corresponding actuator. This does not apply to movements of equipment which

- are continuous or
- automatically controlled or
- require a floating or pressure position because of their function.

Prerequisites for the suitability of the machine are in particular:

- optimal functioning of the brake (brake test)
- compliance with the permissible total weight
- the tyre load bearing capacity

Secure the vehicle against accidental starting and unintended rolling before starting work on the machine.

All interventions on the machine, such as (e.g. assembly work, adjustments, rectification of faults, cleaning, maintenance and repair) are prohibited,

- while the machine is driven.
- as long as the vehicle is not secured with parking brake and/or wheel chocks against accidental rolling.
- if moveable parts have not been blocked to prevent unintended movement.

WARNING

Dropping or lowering machine parts can cause severe crushing injuries etc.! Instruct persons to leave the danger zone.

Parking

DANGER

Danger of severe accidents when manoeuvring. Keep an eye on your environment.

- Keep persons (children) out of the manoeuvring range of the machine.

WARNING

Leaking hydraulic fluid can cause serious injuries! Danger of injury by unwanted machine movements.

NOTE

The must only be parked on a level and firm surface when loaded and, preferably, also when empty. Observe the load bearing capacity of the tyres in the section *Weight and tyres*.

Transport position

NOTE

- Transport the machine only with suitable vehicles such as low loaders. Note the total weight and centre of gravity of the machine when loading.
- Observe the operating instructions of the transport vehicle.
- All tanks of the sprayer must be empty during transport.
- Note the strapping points in the section *Safety stickers*!

WARNING

Danger of road accidents caused by losing the machine or machine parts.

- Check all interlocks before starting to drive.
- Release the parking brake and check the service brake (option).

NOTE

- Make sure before driving on public roads that the machine meets all respective applicable national road traffic regulations.

NOTE

Check the following prior to road travel:

- the light system for damage, function and cleanliness.
- the brake and hydraulic system for apparent defects.
- the parking brake must be fully released.
- the function of the brake system.
- Check whether the illuviation valve has been swivelled to the transport position.
- The access ladder must be folded up and in transport position.
- the overall machine for cleanliness.

WARNING

Danger of crushing, cutting, being caught, being pulled in and impact due to insufficient stability and tipping over.

- Adjust the travel mode in such a way that you will at any time have control over the vehicle.

Be aware of your own abilities, account for the road, traffic, sight and weather conditions as well as the driving characteristics of the machine.

Multi-function control panel

Overview of the operator functions for spraying

The spraying functions are operated on the drive lever of the multi-function control panel.

1 Open / close spraying nozzles
2 Lift parallelogram
3 Lower parallelogram
4 Lift right slope compensation
5 Lift left slope compensation
6 Add sections to left
7 Add sections to right
8 Switch off sections to right
9 Switch off sections to left
10 Application quantity +/- 5% (optional assignment)
11 Application quantity +/- 5% (optional assignment)
12 Activate / deactivate cruise control 2
13 Activate / deactivate cruise control 1
14 Activate/deactivate BoomControl

NOTE

The exact functions of the individual buttons will be explained in the associated chapters!

SectionBox (optional)

The SectionBox is available in the versions with 13 or 18 switches. Border/edge nozzles or sections can be assigned to the switches (1).

The SectionBox can be used in addition to the drive lever (main sprayer switch) or alone to operate the sections. The switch (2) allows switching between the input devices.

Active sections or border/edge nozzles can be identified by the illuminated LED of the respective switch (3).

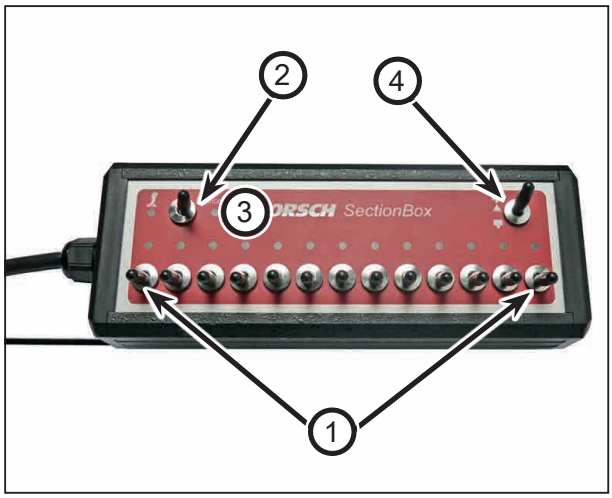

HORSCH SectionBox, 13 sections

- When the main switch (4) is activated, all active sections or border/edge nozzles are enabled.
- When the main switch (4) is deactivated, all active sections or border/edge nozzles are in the *preselected* state.

Pay attention to the allocation of the respective sections or border/edge nozzles to the switches of the SectionBox, the *Terminal Operating Instructions, software version 1.4.7* (or higher).

Installation

The SectionBox can be connected with a Sub-D connector for Cab-In and only in connection with a Terminal Touch 1200.

NOTE

- At the terminal the SectionBox must always be switched to AUX-N.
- For the combination terminal + SectionBox, the following connection sequence must be observed!

  1 ISOBUS

  2 SectionBox

  3 Terminal

Folding the folding boom

⚠ WARNING

Dropping or lowering machine parts can cause severe crushing injuries etc.!

- Folding the folding boom is only allowed from the driver's seat!
- No persons may stay under raised machine parts!
- Order persons to leave the danger zone around the machine. Make sure before folding that no persons are present in the danger zone.
- Comply with the accident prevention instructions.

⚠ CAUTION

Damages to the machine and the supporting surface!

When carrying out a folding process on a slope where uniform folding of the wings cannot be performed the machine may topple over.

- Fold the machine only on a level and firm surface.

⚠ WARNING

Danger of crushing, being pulled in, being caught or impact for operator and third parties may arise if third parties remain in the operating range of the folding boom when unfolding or folding in the folding boom and are caught by the moving parts of the folding boom!

These hazards can cause severe and possibly also fatal injuries.

Keep a sufficient safety distance to moving parts of the machine as long as the engine is running.

Make sure that persons keep a sufficient safety distance to moving parts of the machine.

Order persons to leave the slewing range of the machine.

Immediately release the actuator for unfolding or folding in the folding boom, if a person enters into the slewing range of the folding boom.

⚠ DANGER

Always keep a sufficient distance to overhead power lines when unfolding or folding in the spraying boom! Contacting overheat power lines can cause fatal injuries.

⚠ WARNING

Avoid folding under high voltage power lines. When folding under high voltage power lines, the minimum distances between folding boom and the line must be observed during the folding process. The minimum distances to be observed are in accordance with national laws and guidelines regarding the current strength of the overhead line.

⚠ CAUTION

There are shearing and crushing points on all hydraulically actuated folding components! Folding or unfolding the spraying boom while travelling is prohibited!

Only drive with the machine in locked transport position.

NOTE

The folding boom is controlled via the terminal. In folded and unfolded condition of the folding boom, the hydraulic cylinders for boom folding maintain the corresponding end position (transport and working position).

NOTE

The folding boom must be flushed through before folding it to avoid contamination of the machine. Check the diaphragm valve at regular intervals to prevent subsequent dripping of the nozzles. Refer to the section *Nozzle assembly and cleaning*.

NOTE

The folding process must be performed while the machine is at standstill since the folding boom may otherwise sustain damages or breakage.

- If the folding boom is not secured at a travel speed greater than 2 km/h [1.2 mph] the warning message *Check folding boom position* is displayed on the terminal.
- If the folding process is carried out at a travel speed greater than 2 km/h [1.2 mph] the warning message *Fold only while stopped* is displayed on the terminal.
- If the folding process is carried out at a travel speed greater than 5 km/h [3.1 mph] and the folding boom is not secured, an alarm message is displayed on the terminal and the folding process stops automatically!

  Bring the machine to a stop and press the button for folding again to continue the folding process.

NOTE

- Instructions for operating the terminal are included in the supplied operating instructions!

The folding boom is folded via the terminal. For this purpose access the *Folding* page.

Unfolding

1. Call up the folding menu on the terminal.
2. Select the *Unfold folding boom* function.
3. The folding boom lock opens.
4. The parallelogram lock opens.
5. The folding boom is lifted from the rest.
6. The wings fold to the outside.
7. The slope compensation is unlocked.

Folding in

1. Call up the folding menu on the terminal.
2. Select the *Fold in folding boom* function.
3. The folding boom is lifted.
4. The slope compensation is locked.
5. The wings fold to the inside.
6. The folding boom lock closes.
7. The folding boom is placed in the rest.
8. The parallelogram lock closes.

NOTE

- Move the machine to transport position before road travel, see *Transport position*.

Preparation for spraying operation

⚠ WARNING

Danger caused by accidental contact with crop protection agents / spraying mixture!

Wear personal protective outfit

- when preparing the spraying mixture.
- when cleaning / replacing spray nozzles.
- during all work for cleaning the crop protection sprayer after spraying operation.

When wearing the required protective outfit always follow the instructions of the manufacturer, the product information, the instructions for use, the safety data sheet or the operating instructions for the crop protection agent to be handled.

⚠ NOTE

Basic prerequisite for the proper application of crop protection agents is the proper function of the crop protection sprayer.

- The prescribed maintenance tasks and legal regulations on crop protection sprayers must be complied with. Rectify apparent faults immediately. Have the crop protection sprayer checked, as requested.
- Before starting with spraying check the following value on the control terminal:
  - The spraying pressure range defined on the terminal must agree with the permissible spraying pressure range of the spraying nozzles installed.
- Use all specified filters.
- Clean the filters at regular intervals.

  Trouble-free operation of the crop protection sprayer is only ensured with flawless filtration of the spraying mixture. Appropriate filtering considerably influences the treatment success of the crop protection measure.
- Pay attention to the permissible filter combinations or mesh sizes.

  The mesh sizes of pressure filters and nozzle filters must always be smaller than the nozzle opening of the nozzles used. Notes given by the manufacturer of the crop protection agent must be followed.

  The standard pressure filter element used in the pressure filter has a mesh size of 0.18 mm [0.007 in] with 80 meshes/inch^2. This pressure filter element is adequate for a nozzle size from 02'.

  The pressure filter element with 100 meshes/inch^2 is required for nozzle sizes '015' and '01' (special equipment).
- Remember that the use of pressure filter elements with 100 meshes/inch will have the effect that with some crop protection agents active components may be filtered out. Contact the crop protection agent manufacturer in the respective case.
- Generally clean the crop protection sprayer before placing a different crop protection agent.
- Flushing nozzle line and nozzles:
  - with each nozzle change
  - before installing other nozzles
  - before turning the manual three-fold / five-fold nozzle head to another nozzle.
- Take appropriate action if an error message appears in the display during spraying operation.
- Check the displayed spraying pressure during spraying operation.
- Make sure that the displayed spraying pressure does under no conditions deviate from the specified spraying pressure from the spraying table by more than ±25%, e.g. when changing the application quantity
- More significant deviations from the specified spraying pressure will adversely affect the optimal treatment success of the crop protection measure and/or cause environmental damage.
- Reduce or increase the travel speed, until the permissible spraying pressure range (of the intended spraying pressure) is reached again.

Preparing the spraying mixture

⚠ DANGER

Danger caused by accidental contact with crop protection agents and/or spraying mixture!
When preparing spraying mixture there is the highest risk of coming into contact with crop protection agent.

- Use the stipulated protective outfit!
- Follow the notes of the crop protection agent manufacturer.
- Observe the national and country-specific regulations and standards (e.g. water protection areas).

- Generally, flush in the crop protection agents through the illuviation valve into the spraying mixture container.
- Swing the illuviation valve to the filling position before crop protection agent is filled into the illuviation valve.
- Follow the safety regulations when handling crop protection agents and when preparing the spraying mixture: Read the instructions for use for the crop protection agent.
- Do not prepare the spraying mixture in the vicinity of wells or surface waters.
- Avoid leakages and contamination with crop protection agents and / or spraying mixture by acting appropriately and by wearing appropriate body protection.
- Do not leave the prepared spraying mixture, unused crop protection agent, uncleaned crop protection agent canisters and the uncleaned crop protection sprayer unattended to avoid dangers to other persons.
- Protect contaminated crop protection agent canisters and the contaminated crop protection sprayer against precipitation.
- Ensure sufficient cleanliness during and after spraying mixture preparation to keep the risks as low as possible (e.g. thoroughly wash off and dispose of used gloves. Dispose of washing water and cleaning fluid in a proper manner).

⚠ NOTE

Besides the generally valid information listed hereunder, you should also follow the product-specific procedures described in the instructions for use of the crop protection agents!

- Pay attention to the prescribed water and preparation application quantities as per instructions for use for the crop protection agent.
- Follow the instructions for use of the preparation and the specified precautions!
- Carefully determine the required filling or refill quantities to avoid residual quantities, because environmentally friendly disposal of residual quantities is very difficult.

  Use the Filling table for residual areas to calculate the required refill quantity for the last spraying mixture container filling. In this case, subtract the technical, undiluted residual quantity in the spraying boom from the calculated refill quantity.

  - In this context see chapter *Filling table for residual areas*.
- Thoroughly rinse emptied preparation containers (e.g. with canister flushing agent) and mix in the flushing water to the spraying mixture!

General procedure

1. Determine the required water and preparation application quantity as per instructions for use for the crop protection agent.
2. Calculate the filling or refill quantity for the area to be treated.
3. Fill half of the spraying mixture container with water.
4. Switch on the agitator.
5. Add the calculated preparation quantity.
6. Top up the water shortfall.
7. Before starting the spraying operation stir up the spraying mixture as instructed by the crop protection agent manufacturer.

Calculating filling / refill quantities

NOTE

Use the *Filling table for residual areas* to calculate the required refill quantity for the last spraying mixture container filling.

Example 1: Filling quantities

The following is known:
Rated tank volume 1000 l
Residual quantity in tank 0 l
Required water 400 l/ha

Required amount of chemical per ha
Product A 1.5 kg
Product B 1.0 l

Question:

How many l of water, how many kg or product A and how many l of product B do you have to fill in, if the area to be treated is 2.5 ha?

Calculation formula and solution

Component [quantity/ha] x area [ha]

= required quantity [l] or [kg]

Water:	400 l/ha	x 2.5 ha =	1000 l
Product A:	1.5 kg/ha	x 2.5 ha =	3.75 kg
Product B:	1.0 l/ha	x 2.5 ha =	2.5 l

Example 2: Addition of product, area

The following is known:
Rated tank volume 1000 l
Residual quantity in tank 200 l
Required water 500 l/ha
Recommended concentration 0.15 % l/l or kg/l

Question 1:

How many l or kg preparation must be metered for one container filling?

Calculation formula and answer to question 1:

$$\frac{\text{Water refill quantity [l] x concentration [\%]}}{100}$$

= product addition [l] or [kg]

$$\frac{\text{(1000-200) [l] x 0.15 [\% l/l or kg/l]}}{100}$$

= 1.2 [l] or [kg]

Question 2:

How large is the area to be treated in ha, which can be treated with one filling, if the tank can be sprayed down to a residual quantity of 20 l?

Calculation formula and answer to question 2:

$$\frac{\text{Available amount of chemical [l] – Residual quantity [l]}}{\text{Required water [l/ha]}}$$

= area [ha]

$$\frac{\text{1000 [l] (rated volume) – 20 [l] (residual quantity)}}{\text{500 [l/ha] (required water)}}$$

= 1.96 [ha]

Calculating filling / refill quantities

NOTE

Use the *Filling table for residual areas* to calculate the required refill quantity for the last spraying mixture container filling.

Example 1: Filling quantities

The following is known:
Rated tank volume 264 gal lqd
Residual quantity in tank 0 gal lqd
Required water 43 gal lqd/ac

Required amount of chemical per ha
Product A 3 lbs
Product B 0.3 gal lqd

Question:

How many gal lqd (l) of water, how many lbs (kg of product A and how many gal lqd (l) of product B do you have to fill in if the area to be treated is 6.2 acres?

Calculation formula and solution

Component [quantity/ac] x area [ac]

= required quantity [gal] or [lbs]

Water: 43 gal lqd/ac x 6.2 ac = 267 gal lqd
Product A: 1.3 lbs/ac x 6.2 ac = 8 lbs
Product B: 0.11 gal/ac x 6.18 ac = 0.67 gal lqd

Example 2: Addition of product, area

The following is known:
Rated tank volume 264 gal lqd
Residual quantity in tank 53 gal lqd
Required water 53.5 gal/ac
Recommended concentration 0.15% gal/gal or lbs/gal

Question 1:

How many gal lqd or lbs preparation must be metered for one container filling?

Calculation formula and answer to question 1:

$$\frac{\text{Water refill quantity [gal lqd] x concentration [\%]}}{100}$$

= preparation addition [gal lqd] or [lbs]

$$\frac{\text{(264-53) [gal lqd] x 0.15 [\% gal/gal or lbs/gal]}}{100}$$

= 0.3 [gal lqd] or [lbs]

Question 2:

How large is the area to be treated in ac, which can be treated with one filling, if the tank can be sprayed down to a residual quantity of 5.3 gal lqd?

Calculation formula and answer to question 2:

$$\frac{\text{available amount of chemical [gal lqd] - residual quantity [gal lqd]}}{\text{required water [gal lqd/ac]}}$$

= area [ac]

$$\frac{\text{264 [gal lqd] (rated volume) - 5.3 [gal lqd] (residual quantity)}}{\text{53.5 [gal lqd/ac] (required water)}}$$

= 4.84 [ac]

Filling table for residual areas

NOTE

- Use the *Filling table for residual areas* to calculate the required refill quantity for the last spraying mixture container filling.
- Subtract the residual quantity in the spraying line from the calculated refill quantity!
  - See chapter *Spraying line*.
- The specified refill quantities apply to an application quantity of approx. 10 gal lqd/ac (100 l/ha).
- For other application quantities the refill quantity may multiply.

Refill quantities gal (l) for spraying boom:

Working width [m] / Travel distance ft (m)	24 m	27 m	28 m	100 ft (30 m)	32 m	33 m	120 ft (36 m)	38 m	39 m	40 m	42 m	44 m	45 m
33 (10)	2	3	3	0.8 (3)	3	3	1 (4)	4	4	4	4	4	5
66 (20)	5	5	6	1.6 (6)	6	7	1.8 (7)	8	8	8	8	9	9
98 (30)	7	8	8	2.4 (9)	10	10	3 (11)	11	12	12	13	13	14
131 (40)	10	11	11	3.2 (12)	13	13	3.7 (14)	15	16	16	17	18	18
164 (50)	12	14	14	4 (15)	16	17	4.8 (18)	19	20	20	21	22	23
197 (60)	14	16	17	4.8 (18)	19	20	5.8 (22)	23	23	24	25	26	27
230 (70)	17	19	20	5.5 (21)	22	23	6.6 (25)	27	27	28	29	31	32
262 (80)	19	22	22	6.3 (24)	26	26	7.7 (29)	30	31	32	34	35	36
295 (90)	22	24	25	7 (27)	29	30	8.5 (32)	34	35	36	38	40	41
328 (100)	24	27	28	8 (30)	32	33	9.5 (36)	38	39	40	42	44	45
656 (200)	48	54	56	15.8 (60)	64	66	19 (72)	76	78	80	84	88	90
984 (300)	72	81	84	24 (90)	96	99	28.5 (108)	114	117	120	126	132	135
1.312 (400)	96	108	112	32 (120)	128	132	38 (144)	152	156	160	168	176	180
1.640 (500)	120	135	140	40 (150)	160	165	48 (180)	190	195	200	210	220	225

Example: Refill quantity

Remaining residual distance: 100 m
Application quantity: 100 l/ha
Working width: 30 m
Residual quantity in spraying line: approx. 15 l

1. Use the filling table to calculate the refill quantity.

   In the example the refill quantity is 30 l.
2. Subtract the residual quantity in the spraying line from the calculated refill quantity.
3. Required refill quantity: **30 l - 15 l = 15 l**

Example: Refill quantity

Remaining residual distance: 328 ft
Application quantity: 10.7 gal lqd/ac
Working width: 100 ft
Residual quantity in spraying line: approx. 4 gal lqd

1. Use the filling table to calculate the refill quantity.

   In the example the refill quantity is 8 gal lqd.
2. Subtract the residual quantity in the spraying line from the calculated refill quantity.
3. Required refill quantity:

   8 gal lqd – 4 gal lqd = 4 gal lqd

Nozzle selection

NOTE

For the selection and use of nozzles you should also follow the data and recommendations of the respective nozzle manufacturer!

General

This chapter describes two possibilities for determining the appropriate nozzles and their characteristics as per ISO 10625.

NOTE

All application quantities (in l/ha) mentioned in the spraying tables apply for **water.**
For liquid fertiliser, these application quantities must first be converted:
For conversion to ammonium nitrate - carbonyl diamide solution multiply the application quantity with 0.88.
For conversion to NP-solution multiply the application quantity with 0.85.

$H_2O \underset{\text{x 1.14}}{\overset{\text{x 0.88}}{\rightleftharpoons}}$ Ammonium nitrate - carbonyl diamide solution

$H_2O \underset{\text{x 1.18}}{\overset{\text{x 0.85}}{\rightleftharpoons}}$ NP-solution

The diagram (a) serves the purpose of selecting the suitable **nozzle type**.
The nozzle type is determined by

- the intended travel speed
- the required application quantity
- the required atomizing characteristic (fine, medium, or large drops) of the crop protection agent used for the crop protection measure to be carried out.

The universal table (b) serves the purpose of determining

- the **nozzle size**
- the required **spraying pressure**
- the required individual nozzle output for volumetric measurement of the crop protection sprayer.

Procedure

- The tables apply to 50 cm nozzle spacing.
- Nozzle sizes and colour coding acc. to ISO 10625

With diagram and universal table

1 Determine application quantity, travel speed and atomizing characteristic.

Nozzle type ⟶ diagram (a):

2 Determine the operating point. The operating point is the intersection of travel speed and application quantity.

3 Draw a vertical from the operating point down.

4 Choose the suitable nozzle type for the required atomizing characteristic.
For this purpose follow the classification in the left diagram (fine, medium, coarse drops). Pay attention to the possible nozzle sizes.

Characteristics ⟶ Universal table:
Change to the universal table for a more accurate determination of the characteristic values.

5 In the column with the determined application quantity find the line with the determined travel speed (if necessary, use an approximate value).

6 In the right hand line read the nozzle output and the suitable nozzle sizes with the associated pressure.

Example:

to 1.	Application quantity:	200 l/ha
	Travel speed:	8 km/h
	Atomizing characteristic:	coarse drops
to 2 / 3.	See diagram (a)	
to 4.	Nozzle type:	ID/AL
	possible nozzle sizes:	-025 or -03
to 5.	See Universal table	
to 6.	Nozzle output:	1.35 l/min
	Nozzles:	Size 025 with 5.5 bar
		Size 030 with 3.8 bar

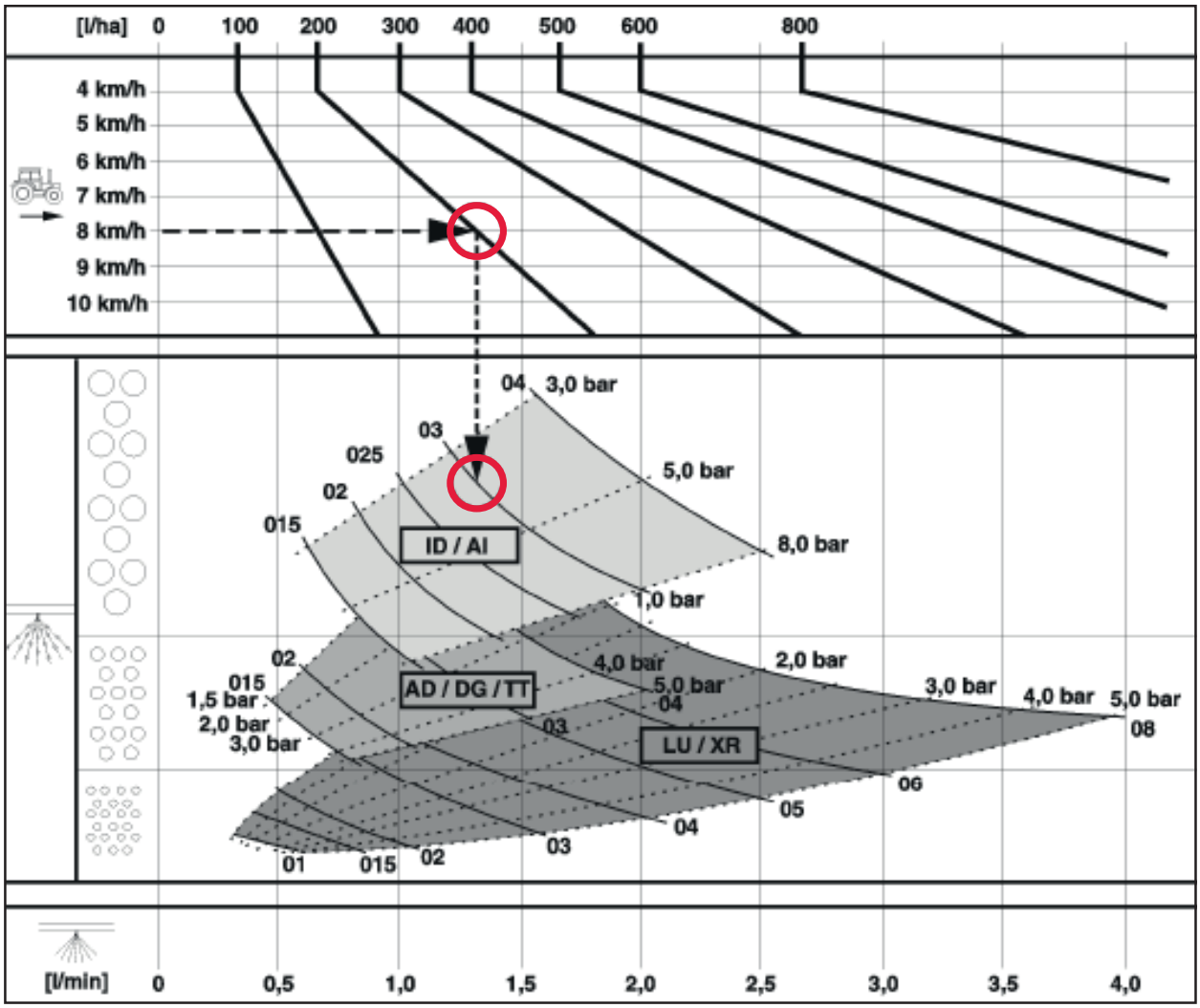

Diagram (a) with example

Application quantity l/ha										Nozzle output l/min	Nozzle size									
100	125	150	175	200	225	250	300	400	500		-01	-015	-02	-025	-03	-04	-05	-06	-08	-10
										0,25	1,2									
										0,30	1,7									
										0,35	2,3	1,0								
4,8										0,40	3,0	1,3								
5,4										0,45	3,8	1,7								
6,0	4,8									0,50	4,7	2,1	1,2							
6,6	5,3									0,55	5,7	2,5	1,4							
7,2	5,8	4,8								0,60	6,7	3,0	1,7	1,1						
7,8	6,2	5,2								0,65	7,9	3,5	2,0	1,3						
8,4	6,7	5,6	4,8							0,70	9,2	4,1	2,3	1,5	1,0					
9,0	7,2	6,0	5,1							0,75		4,7	2,6	1,7	1,2					
9,6	7,7	6,4	5,5	4,8						0,80		5,3	3,0	1,9	1,3					
10,2	8,2	6,8	5,8	5,1						0,85		6,0	3,4	2,2	1,5					
10,8	8,6	7,2	6,2	5,4	4,8					0,90		6,8	3,8	2,4	1,7					
11,4	9,1	7,6	6,5	5,7	5,1					0,95		7,5	4,2	2,7	1,9	1,1				
12,0	9,6	8,0	6,9	6,0	5,3	4,8				1,00		8,4	4,7	3,0	2,1	1,2				
12,6	10,1	8,4	7,2	6,3	5,6	5,0				1,05		9,2	5,2	3,3	2,3	1,3				
13,2	10,6	8,8	7,5	6,6	5,9	5,3				1,10		10,1	5,7	3,6	2,5	1,4				
13,8	11,0	9,2	7,9	6,9	6,1	5,5				1,15			6,2	4,0	2,8	1,5	1,0			
14,4	11,5	9,6	8,2	7,2	6,4	5,8	4,8			1,20			6,7	4,3	3,0	1,7	1,1			
15,0	12,0	10,0	8,6	7,5	6,7	6,0	5,0			1,25			7,3	4,7	3,3	1,8	1,2			
15,6	12,5	10,4	8,9	7,8	6,9	6,2	5,2			1,30			7,9	5,1	3,5	2,0	1,3			
16,2	13,0	10,8	9,3	8,1	7,2	6,5	5,4			1,35			8,5	5,5	3,8	2,1	1,4			
16,8	13,4	11,2	9,6	8,4	7,5	6,7	5,6			1,40			9,2	5,9	4,1	2,3	1,5	1,0		
17,4	13,9	11,6	9,9	8,7	7,7	7,0	5,8			1,45				6,3	4,4	2,5	1,6	1,1		
18,0	14,4	12,0	10,3	9,0	8,0	7,2	6,0			1,50				6,8	4,7	2,6	1,7	1,2		
19,2	15,4	12,8	11,0	9,6	8,5	7,7	6,4	4,8		1,60				7,7	5,3	3,0	1,9	1,3		
20,4	16,3	13,6	11,7	10,2	9,1	8,2	6,8	5,1		1,70				8,7	6,0	3,4	2,2	1,5		
21,6	17,3	14,4	12,3	10,8	9,6	8,6	7,2	5,4		1,80				9,7	6,7	3,8	2,4	1,7	1,0	
22,8	18,2	15,2	13,0	11,4	10,1	9,1	7,6	5,7		1,90					7,5	4,2	2,7	1,9	1,1	
24,0	19,2	16,0	13,7	12,0	10,7	9,6	8,0	6,0	4,8	2,00					8,3	4,7	3,0	2,1	1,2	
	20,2	16,8	14,4	12,6	11,2	10,1	8,4	6,3	5,0	2,10					9,2	5,2	3,3	2,3	1,3	
	21,1	17,6	15,1	13,2	11,7	10,6	8,8	6,6	5,3	2,20					10,1	5,7	3,6	2,5	1,4	
	22,1	18,4	15,8	13,8	12,3	11,0	9,2	6,9	5,5	2,30						6,2	4,0	2,8	1,6	1,0
	23,0	19,2	16,5	14,4	12,8	11,5	9,6	7,2	5,8	2,40						6,7	4,3	3,0	1,7	1,1
	24,0	20,0	17,1	15,0	13,3	12,0	10,0	7,5	6,0	2,50						7,3	4,7	3,3	1,8	1,2
		20,8	17,8	15,6	13,9	12,5	10,4	7,8	6,2	2,60						7,9	5,1	3,5	2,0	1,3
		21,6	18,5	16,2	14,4	13,0	10,8	8,1	6,5	2,70						8,5	5,5	3,8	2,1	1,4
		22,4	19,2	16,8	14,9	13,4	11,2	8,4	6,7	2,80						9,2	5,9	4,1	2,3	1,5
		23,2	19,9	17,4	15,5	13,9	11,6	8,7	7,0	2,90						9,9	6,3	4,4	2,5	1,6
		24,0	20,6	18,0	16,0	14,4	12,0	9,0	7,2	3,00							6,7	4,7	2,6	1,7
			21,3	18,6	16,5	14,9	12,4	9,3	7,4	3,10							7,2	5,0	2,8	1,8
			21,9	19,2	17,1	15,4	12,8	9,6	7,7	3,20							7,7	5,3	3,0	1,9
			22,6	19,8	17,6	15,8	13,2	9,9	7,9	3,30							8,2	5,7	3,2	2,0
			23,3	20,4	18,1	16,3	13,6	10,2	8,2	3,40							8,7	6,0	3,4	2,2
			24,0	21,0	18,7	16,8	14,0	10,5	8,4	3,50							9,2	6,4	3,6	2,3
				21,6	19,2	17,3	14,4	10,8	8,6	3,60							9,7	6,7	3,8	2,4
				22,2	19,7	17,8	14,8	11,1	8,9	3,70							10,3	7,1	4,0	2,6
				22,8	20,3	18,2	15,2	11,4	9,1	3,80								7,5	4,2	2,7
				23,4	20,8	18,7	15,6	11,7	9,4	3,90								7,9	4,5	2,9
				24,0	21,3	19,2	16,0	12,0	9,6	4,00								8,3	4,7	3,0
					21,9	19,7	16,4	12,3	9,8	4,10								8,8	4,9	3,2
					22,4	20,2	16,8	12,6	10,1	4,20								9,2	5,2	3,3
					22,9	20,6	17,2	12,9	10,3	4,30								9,6	5,4	3,5
					23,5	21,1	17,6	13,2	10,6	4,40								10,1	5,7	3,6
					24,0	21,6	18,0	13,5	10,8	4,50									5,9	3,8
						22,1	18,4	13,8	11,0	4,60									6,2	4,0
						22,6	18,8	14,1	11,3	4,70									6,5	4,1
						23,0	19,2	14,4	11,5	4,80									6,8	4,3
						23,5	19,6	14,7	11,8	4,90									7,0	4,5
						24,0	20,0	15,0	12,0	5,00									7,3	4,7

Travel speed km/h

Pressure bar

Universal table (b) with 50 cm nozzle spacing (with example)
The values apply for water of 20 °C, pressure measured directly at the nozzle.
Check the values with a measuring vessel before the start of application.

With placing quantity table

1 Determine placing quantity and travel speed.
2 In the placing quantity table look for the column with the required travel speed.
3 Look for the line(s) with the required placing quantity (use approximate values, if necessary).
4 Read nozzle size, pressure, and nozzle output.

Example:

1	Placing quantity:			200 l/ha
	Travel speed:			8 km/h
2	See placing quantity table			
3	See placing quantity table			
4	Nozzles:	a)	Size:	025
			Pressure	5.0 bar
			Nozzle output:	1.29 l/min
		b)	Size:	03
			Pressure:	4.0 bar
			Nozzle output:	1.39 l/min

Type Colour	Pressure bar	l/min	Placing quantity in l/ha at km/h							
			5	6	7	8	10	12	14	16
-01 orange	1,0	0,23	55	46	40	35	28	23	20	17
	1,5	0,28	68	57	49	42	34	28	24	21
	2,0	0,33	78	65	56	49	39	33	28	25
	2,5	0,37	88	73	63	55	44	37	31	27
	3,0	0,40	96	80	69	60	48	40	34	30
	4,0	0,46	111	92	79	69	55	46	40	35
	5,0	0,52	124	103	89	78	62	52	44	39
	6,0	0,57	136	113	97	85	68	57	49	42
	7,0	0,61	147	122	105	92	73	61	52	46
	8,0	0,65	157	131	112	98	78	65	56	49
-015 green	1,0	0,35	83	69	59	52	42	35	30	26
	1,5	0,42	102	85	73	64	51	42	36	32
	2,0	0,49	118	98	84	74	59	49	42	37
	2,5	0,55	132	110	94	82	66	55	47	41
	3,0	0,60	144	120	103	90	72	60	51	45
	4,0	0,69	166	139	119	104	83	69	59	52
	5,0	0,78	186	155	133	116	93	78	66	58
	6,0	0,85	204	170	146	127	102	85	73	64
	7,0	0,92	220	183	157	138	110	92	79	69
	8,0	0,98	235	196	168	147	118	98	84	74
-02 yellow	1,0	0,46	111	92	79	69	55	46	40	35
	1,5	0,57	136	113	97	85	68	57	49	42
	2,0	0,65	157	131	112	98	78	65	56	49
	2,5	0,73	175	146	125	110	88	73	63	55
	3,0	0,80	192	160	137	120	96	80	69	60
	4,0	0,92	222	185	158	139	111	92	79	69
	5,0	1,03	248	207	177	155	124	103	89	77
	6,0	1,13	271	226	194	170	136	113	97	85
	7,0	1,22	293	244	209	183	147	122	105	92
	8,0	1,31	313	261	224	196	157	131	112	98
-025 lilac	1,0	0,58	138	115	99	87	69	58	49	43
	1,5	0,71	170	141	121	106	85	71	61	53
	2,0	0,82	196	163	140	122	98	82	70	61
	2,5	0,91	219	183	157	137	110	91	78	68
	3,0	1,00	240	200	171	150	120	100	86	75
	4,0	1,15	277	231	198	173	138	115	99	87
	5,0	1,29	310	258	221	194	155	129	111	97
	6,0	1,41	339	283	242	212	170	141	121	106
	7,0	1,53	367	306	262	229	183	153	131	115
	8,0	1,63	392	326	280	245	196	163	140	122
-03 blue	1,0	0,69	166	139	119	104	83	69	59	52
	1,5	0,85	204	170	146	127	102	85	73	64
	2,0	0,98	235	196	168	147	118	98	84	74
	2,5	1,10	263	219	188	164	131	110	94	82
	3,0	1,20	288	240	206	180	144	120	103	90
	4,0	1,39	332	277	237	208	166	139	119	104
	5,0	1,55	372	310	266	232	186	155	133	116
	6,0	1,70	407	339	291	255	204	170	145	127
	7,0	1,83	440	367	314	275	220	183	157	137
	8,0	1,96	470	392	336	294	235	196	168	147
-04 red	1,0	0,92	222	185	158	139	111	92	79	69
	1,5	1,13	271	226	194	170	136	113	97	85
	2,0	1,31	313	261	224	196	157	131	112	98
	2,5	1,46	351	292	250	219	175	146	125	110
	3,0	1,60	384	320	274	240	192	160	137	120
	4,0	1,85	444	370	317	277	222	185	158	139
	5,0	2,07	496	413	354	310	248	207	177	155
	6,0	2,26	543	453	388	339	272	226	194	170
	7,0	2,44	587	489	419	367	293	244	209	183
	8,0	2,61	627	522	448	392	313	261	224	196

Type Colour	Pressure bar	l/min	Placing quantity in l/ha at km/h							
			5	6	7	8	10	12	14	16
-05 brown	1,0	1,16	277	231	198	173	139	116	99	87
	1,5	1,41	339	283	242	212	170	141	121	106
	2,0	1,63	392	327	280	245	196	163	140	122
	2,5	1,83	438	365	313	274	219	183	157	137
	3,0	2,00	480	400	343	300	240	200	171	150
	4,0	2,31	554	462	396	346	277	231	198	173
	5,0	2,58	620	516	443	387	310	258	221	194
	6,0	2,83	679	566	485	424	339	283	242	212
	7,0	3,06	733	611	524	458	367	306	262	229
	8,0	3,26	783	653	560	490	392	326	280	245
-06 grey	1,0	1,39	333	277	238	208	166	139	119	104
	1,5	1,70	407	339	291	255	204	170	145	127
	2,0	1,96	470	392	336	294	235	196	168	147
	2,5	2,19	526	438	376	329	263	219	188	164
	3,0	2,40	576	480	411	360	288	240	206	180
	4,0	2,77	665	554	475	416	333	277	238	208
	5,0	3,10	744	620	531	465	372	310	266	232
	6,0	3,39	815	679	582	509	407	339	291	255
	7,0	3,67	880	733	628	550	440	367	314	275
	8,0	3,92	941	784	672	588	470	392	336	294
-08 white	1,0	1,85	444	370	317	277	222	185	158	139
	1,5	2,26	543	453	388	339	272	226	194	170
	2,0	2,61	627	523	448	392	314	261	224	196
	2,5	2,92	701	584	501	438	351	292	250	219
	3,0	3,20	768	640	549	480	384	320	274	240
	4,0	3,69	887	739	633	554	443	369	317	277
	5,0	4,13	992	826	708	620	496	413	354	310
	6,0	4,53	1086	905	776	679	543	453	388	339
	7,0	4,89	1173	978	838	733	587	489	419	367
	8,0	5,22	1254	1045	896	784	627	522	448	392
-10 black	1,0	2,31	554	462	396	346	277	231	198	173
	1,5	2,83	679	566	485	424	339	283	242	212
	2,0	3,27	784	653	560	490	392	327	280	245
	2,5	3,65	876	730	626	548	438	365	313	274
	3,0	4,00	960	800	686	600	480	400	343	300
	4,0	4,62	1108	924	792	693	554	462	396	346
	5,0	5,16	1239	1033	885	775	620	516	443	387
	6,0	5,66	1357	1131	970	848	679	566	485	424
	7,0	6,11	1466	1222	1047	917	733	611	524	458
	8,0	6,53	1567	1306	1119	979	783	653	560	490
-12 turquoise	1,0	2,77	665	554	475	416	333	277	238	208
	1,5	3,39	814	679	582	509	407	339	291	255
	2,0	3,92	941	784	672	588	470	392	336	294
	2,5	4,38	1051	876	751	657	526	438	376	329
	3,0	4,80	1152	960	823	720	576	480	411	360
	4,0	5,54	1330	1109	950	831	665	554	475	416
-16 violet	1,0	3,70	887	739	634	554	444	370	317	277
	1,5	4,52	1086	905	776	679	543	453	388	339
	2,0	5,23	1254	1045	896	784	627	523	448	392
	2,5	5,84	1402	1168	1001	876	701	584	501	438
	3,0	6,40	1536	1280	1097	960	768	640	549	480
	4,0	7,39	1774	1478	1267	1109	887	739	633	554
-20 bright-blue	1,0	4,62	1108	924	792	693	554	462	396	346
	1,5	5,66	1358	1131	970	849	679	566	485	424
	2,0	6,53	1568	1306	1120	980	784	653	560	490
	2,5	7,30	1753	1461	1252	1095	876	730	626	548
	3,0	8,00	1920	1600	1371	1200	960	800	686	600
	4,0	9,24	2217	1848	1584	1386	1109	924	792	693

Universal table with 50 cm nozzle spacing (with example)
The values apply for water of 20 °C, pressure measured directly at the nozzle.
Check the values with a measuring vessel before the start of application.

Size ISO	Flow PSI	Capacity GPM	Gallons per acre based on 20" nozzle spacing										
			4 MPH	5 MPH	6 MPH	7 MPH	8 MPH	10 MPH	12 MPH	14 MPH	16 MPH	18 MPH	20 MPH
015	20	0.11	7.9	6.3	5.2	4.5	3.9	3.1	2.6	2.2	2.0	1.7	1.6
	30	0.13	9.6	7.7	6.4	5.5	4.8	3.9	3.2	2.8	2.4	2.1	1.9
	40	0.15	11.1	8.9	7.4	6.4	5.6	4.5	3.7	3.2	2.8	2.5	2.2
	50	0.17	12.4	10.0	8.3	7.1	6.2	5.0	4.1	3.6	3.1	2.8	2.5
	60	0.18	13.6	10.9	9.1	7.8	6.8	5.5	4.5	3.9	3.4	3.0	2.7
	70	0.20	14.7	11.8	9.9	8.4	7.4	5.9	4.9	4.2	3.7	3.3	2.9
	80	0.21	15.7	12.6	10.5	9.0	7.9	6.3	5.2	4.5	3.9	3.5	3.1
	90	0.22	16.7	13.4	11.1	9.5	8.3	6.7	5.6	4.8	4.2	3.7	3.3
	100	0.24	17.6	14.1	11.7	10.1	8.8	7.0	5.9	5.0	4.4	3.9	3.5
	120	0.26	19.3	15.4	12.9	11.0	9.6	7.7	6.4	5.5	4.9	4.3	3.9
02	20	0.14	10.5	8.4	7.0	6.0	5.2	4.2	3.5	3.0	2.6	2.3	2.1
	30	0.17	12.9	10.3	8.6	7.3	6.4	5.1	4.3	3.7	3.2	2.9	2.6
	40	0.20	14.8	11.9	9.9	8.5	7.4	5.9	4.9	4.2	3.7	3.3	3.0
	50	0.22	16.6	13.3	11.1	9.5	8.3	6.6	5.5	4.7	4.1	3.7	3.3
	60	0.24	18.2	14.5	12.1	10.4	9.1	7.3	6.1	5.2	4.5	4.0	3.6
	70	0.26	20	15.7	13.1	11.2	9.8	7.9	6.5	5.6	4.9	4.4	3.9
	80	0.28	21	16.8	14.0	12.0	10.5	8.4	7.0	6.0	5.2	4.7	4.2
	90	0.30	22	17.8	14.8	12.7	11.1	8.9	7.4	6.4	5.6	4.9	4.5
	100	0.32	24	18.8	15.6	13.4	11.7	9.4	7.8	6.7	5.9	5.2	4.7
	120	0.35	24	21	17.1	14.7	12.9	10.3	8.6	7.3	6.4	5.7	5.1
025	20	0.18	13.1	10.5	8.7	7.5	6.6	5.2	4.4	3.7	3.3	2.9	2.6
	30	0.22	16.1	12.9	10.7	9.2	8.0	6.4	5.4	4.6	4.0	3.6	3.2
	40	0.25	18.5	14.8	12.4	10.6	9.3	7.4	6.2	5.3	4.6	4.1	3.7
	50	0.28	21	16.6	13.8	11.9	10.4	8.3	6.9	5.9	5.2	4.6	4.1
	60	0.31	23	18.2	15.1	13.0	11.4	9.1	7.6	6.5	5.7	5.0	4.5
	70	0.33	25	20	16.4	14.0	12.3	9.8	8.2	7.0	6.1	5.5	4.9
	80	0.35	26	21	17.5	15.0	13.1	10.5	8.7	7.5	6.6	5.8	5.2
	90	0.37	28	22	18.5	15.9	13.9	11.1	9.3	7.9	7.0	6.2	5.6
	100	0.40	29	24	20	16.8	14.7	11.7	9.8	8.4	7.3	6.5	5.9
	120	0.43	32	26	21	18.4	16.1	12.9	10.7	9.2	8.0	7.1	6.4
03	20	0.21	15.7	12.6	10.5	9.0	7.9	6.3	5.2	4.5	3.9	3.5	3.1
	30	0.26	19.3	15.4	12.9	11.0	9.6	7.7	6.4	5.5	4.8	4.3	3.9
	40	0.30	22	17.8	14.8	12.7	11.1	8.9	7.4	6.4	5.6	4.9	4.5
	50	0.34	25	20	16.6	14.2	12.4	10.0	8.3	7.1	6.2	5.5	5.0
	60	0.37	27	22	18.2	15.6	13.6	10.9	9.1	7.8	6.8	6.1	5.5
	70	0.40	29	24	20	16.8	14.7	11.9	9.8	8.4	7.4	6.5	5.9
	80	0.42	32	25	21	18.0	15.7	12.6	10.5	9.0	7.9	7.0	6.3
	90	0.45	33	27	22	19.1	16.7	13.4	11.1	9.5	8.3	7.4	6.7
	100	0.47	35	29	24	20	17.6	14.1	11.7	10.1	8.8	7.8	7.0
	120	0.52	39	31	26	22	19.3	15.4	12.9	11.0	9.6	8.6	7.7

Size ISO	Flow PSI	Capacity GPM	Gallons per acre based on 20" nozzle spacing										
			4 MPH	5 MPH	6 MPH	7 MPH	8 MPH	10 MPH	12 MPH	14 MPH	16 MPH	18 MPH	20 MPH
04	20	0.28	21	16.8	14.0	12.0	10.5	8.4	7.0	6.0	5.3	4.7	4.2
	30	0.34	26	21	17.2	14.7	12.9	10.3	8.6	7.4	6.4	5.7	5.1
	40	0.40	30	24	20	17.0	14.8	11.9	9.9	8.5	7.4	6.6	5.9
	50	0.45	33	27	22	19.0	16.6	13.3	11.1	9.5	8.3	7.4	6.6
	60	0.49	36	29	24	21	19.2	14.5	12.1	10.4	9.1	9.1	7.3
	70	0.53	39	31	26	23	19.6	15.7	13.1	11.2	9.8	8.7	7.9
	80	0.57	42	34	28	24	21	16.8	14.0	12.0	10.5	9.3	8.4
	90	0.60	45	36	30	26	22	17.8	14.8	12.7	11.1	9.9	8.9
	100	0.63	47	38	31	27	24	18.8	15.6	13.4	11.7	10.4	9.4
	120	0.69	51	41	34	29	26	21	17.1	14.7	12.9	11.4	10.3
05	20	0.35	26	21	17.5	15.0	13.1	10.5	8.8	7.5	6.6	5.8	5.3
	30	0.43	32	26	21	18.4	16.1	12.9	10.7	9.2	8.0	7.1	6.4
	40	0.50	37	30	25	21	18.6	14.9	12.4	10.6	9.3	8.3	7.4
	50	0.56	42	33	28	24	21	16.6	13.8	11.9	10.4	9.2	8.3
	60	0.61	46	36	30	26	23	18.2	15.2	13.0	11.4	10.1	9.1
	70	0.66	49	39	33	26	25	20	16.4	14.0	12.3	10.9	9.8
	80	0.71	53	42	35	30	26	21	17.5	15.0	13.1	11.7	10.5
	90	0.75	56	45	37	32	28	22	18.6	15.9	13.9	12.4	11.1
	100	0.79	59	47	39	34	29	24	20	16.8	14.7	13.1	11.7
	120	0.87	64	52	43	37	32	26	21	18.4	16.1	14.3	12.9
06	20	0.42	32	25	21	18.0	15.8	12.6	10.5	9.0	7.9	7.0	6.3
	30	0.52	39	31	26	22	19.3	15.4	12.9	11.0	9.6	8.6	7.7
	40	0.60	45	36	30	26	22	17.8	14.9	12.7	11.1	9.9	8.9
	50	0.67	50	40	33	29	25	20	16.6	14.2	12.5	11.1	10.0
	60	0.74	55	44	36	31	27	22	19.2	15.6	13.6	12.1	10.9
	70	0.79	59	47	39	34	30	24	20	16.8	14.7	13.1	11.8
	80	0.85	63	50	42	36	32	25	21	18.0	15.9	14.0	12.6
	90	0.90	67	54	45	38	33	27	22	19.1	16.7	14.9	13.4
	100	0.95	71	56	47	40	35	28	24	20	17.6	15.7	14.1
	120	1.04	77	62	52	44	39	31	26	22	19.3	17.2	15.4
08	20	0.57	42	34	28	24	21	16.8	14.0	12.0	10.5	9.3	8.4
	30	0.69	51	41	34	29	26	21	17.1	14.7	12.9	11.4	10.3
	40	0.80	59	47	39	34	30	24	20	16.9	14.8	13.1	11.8
	50	0.89	66	53	44	38	33	27	22	18.9	16.5	14.7	13.2
	60	0.98	73	58	48	42	36	29	24	21	18.1	16.1	14.5
	70	1.05	78	63	52	45	39	31	26	22	20	17.4	15.7
	80	1.13	84	67	56	48	42	34	28	24	21	18.6	16.7
	90	1.20	89	71	59	51	44	36	30	25	22	20	17.8
	100	1.26	94	75	62	54	47	37	31	27	23	21	18.7
	120	1.38	103	82	68	59	51	41	34	29	26	23	21

*Table based on spraying water at 70°F, pressure measured at the nozzle, flow rate may vary +/- 5%

Recommended pressure:

AirMix nozzles	20-80 psi
TurboDrop TD nozzles	30-120 psi
SoftDrop nozzles	30-80 psi

AirMix

SoftDrop

Fits for PWM

TD XL /D

TD-ADF /D

Universal table with 20 in. nozzle spacing (with example)
The values apply for water of 68 °F, pressure measured directly at the nozzle.
Check the values with a measuring vessel before the start of application.

The following applies to folding booms with 10 in. nozzle spacing:

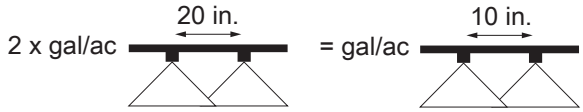

Example 20 in. (output per nozzle)

$$\frac{20 \text{ gal/ac} \times 20 \text{ in.} \times 5 \text{ mph}}{6000}$$

= 0.34 gal/min

Example 10 in. (output per 2 nozzles)

$$\frac{2 \times 20 \text{ gal/ac} \times 10 \text{ in.} \times 5 \text{ mph}}{6000}$$

= 0.34 gal/min

Pressure ranges of different nozzles

Nozzle type	Nozzle size	Permissible pressure range bar [psi]	
		min. pressure	max. pressure
LU / XRC - nozzles	015	1 bar [14 psi]	1.5 bar [22 psi]
LU / XRC - nozzles	02	1 bar [14 psi]	2.5 bar [36 psi]
LU / XRC - nozzles	03	1 bar [14 psi]	3.0 bar [44 psi]
LU / XRC - nozzles	04 – 08	1 bar [14 psi]	5.0 bar [73 psi]
AD / DG / TT	all sizes	1.5 bar [22 psi]	6.0 bar [87 psi]
AI	all sizes	2 bar [29 psi]	8.0 bar [116 psi]
ID	all sizes	2 bar [29 psi]	8.0 bar [116 psi]
Air-Mix nozzles	all sizes	1 bar [14 psi]	6.0 bar [87 psi]
IDK / IDKN	all sizes	1 bar [14 psi]	6.0 bar [87 psi]
TTI	all sizes	1 bar [14 psi]	6.0 bar [87 psi]
AVI	all sizes	2 bar [29 psi]	8.0 bar [116 psi]

Permissible pressure ranges of different nozzle types and nozzle sizes

Fluid circuit

Design of water system Basic and water system CCS

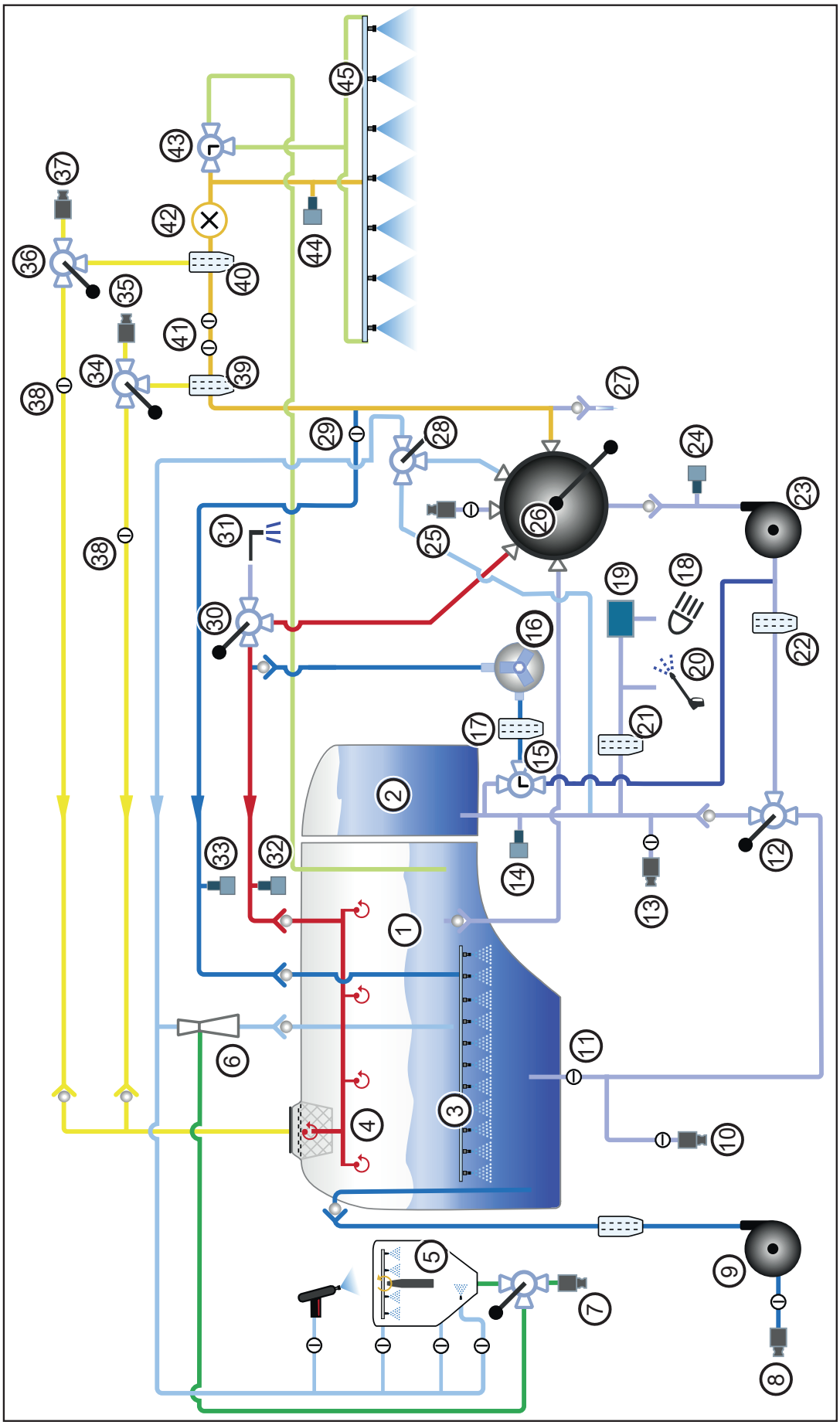

1 Spraying mixture container
2 Fresh water tank
3 Agitator
4 Internal cleaning
5 Illuviation valve
6 Injector
7 Eco Fill
8 External filling front right (optional)
9 PowerFill active filling pump (optional)
10 Direct filling/residue drain
11 Switch-over ball valve, solution
12 Switch-over ball valve, fresh water/solution
13 Fresh water filling
14 Filling level sensor, fresh water tank
15 Switch-over ball valve, fresh water/suction aid (only with CCS)
16 Piston diaphragm pump (only with CCS)
17 Suction filter piston diaphragm pump (only with CCS)
18 NightLight with cleaning (optional)
19 Electrical pump NightLight cleaning (optional)
20 High pressure cleaner (optional)
21 Filter NightLight/outside cleaning (optional)
22 Suction filter with drain valve
23 Centrifugal pump
24 Spraying pump pressure sensor
25 External pressure output
26 Mechanical 6-way valve on pressure side
27 Air valve (optional)
28 Switch-over ball valve illuviation valve/fresh water tank filling (optional)
29 Agitator intensity
30 Switch-over ball valve outside/internal cleaning (optional)
31 Outside cleaning (optional)
32 Internal cleaning pressure sensor
33 Agitator pressure sensor
34 3-way valve pressure filter
35 Pressure filter drain
36 3-way valve pressure filter
37 Pressure filter drain
38 Pressure filter flushing, mechanical (adjustable intensity)
39 Pressure filter
40 Pressure filter
41 Folding boom supply lock valve (2x)
42 Flow meter
43 Switch-over ball valve circulation/spraying
44 Pressure sensor folding boom
45 Folding boom

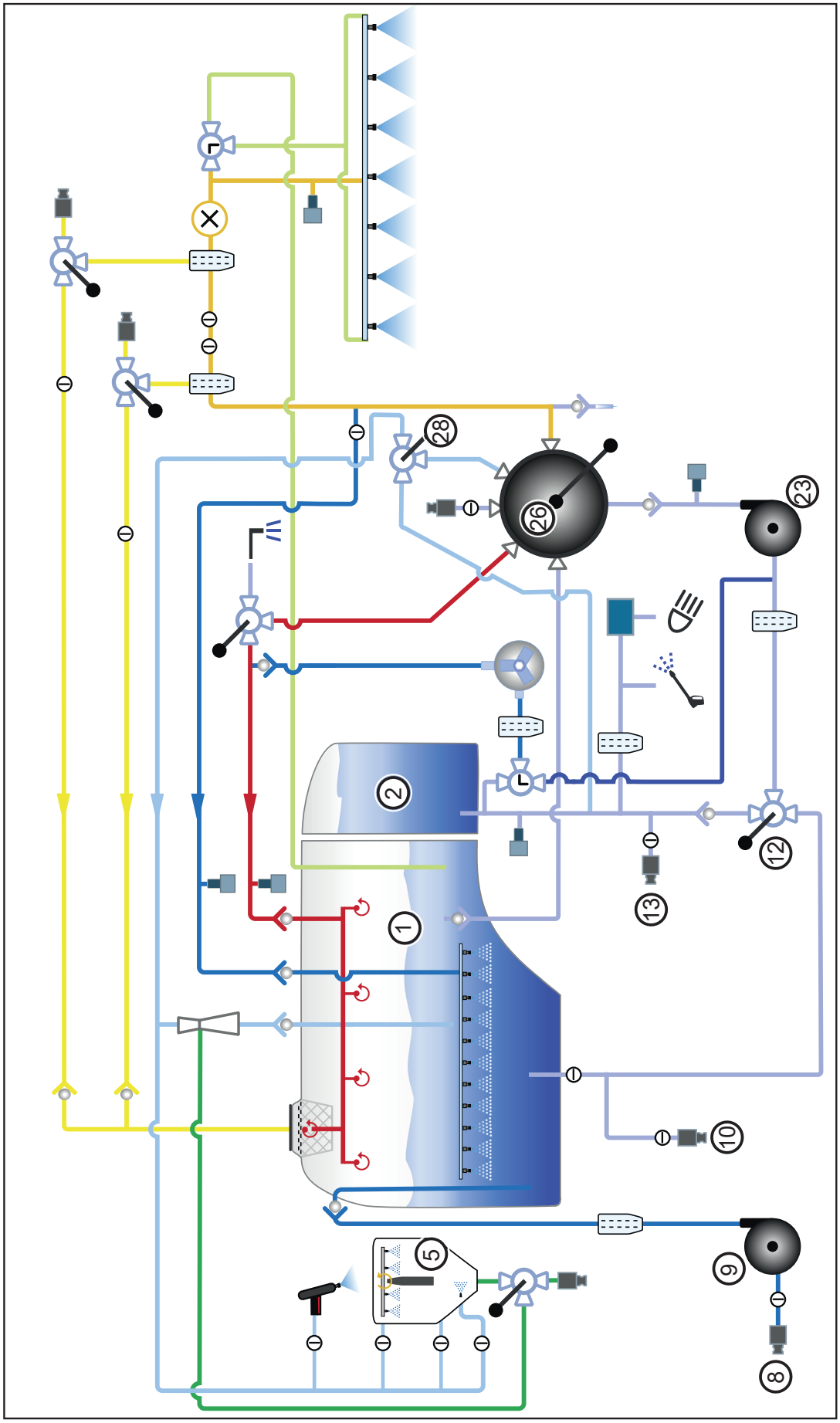
28
26
23
2
12
13
1
10
5
9
8

Solution tank filling

Several filling variants are available.

1) CCS water flow: Fluid can only be sucked in via the standard connection **(10)** when the spraying mixture container maintenance valve is closed. Recommendation: Fill the machine with an external filling pump. Basic water flow: Recommendation: Fill the machine with an external filling pump.
Illuviation valve, circulation line/agitator, internal cleaning. Turn the pressure valve **(26)** to the desired position for this purpose.

Variant 2: Optionally via direct filling port **(8)**. The sucked in fluid can be transported directly into the spraying mixture container **(1)** via an external pump.

Variant 3: The fluid can be sucked in and transported directly into the spraying mixture container via port **(8)** and the optionally installed pump **(9)**.

Fresh water tank filling:

Variant 1:
Fill via **(13)** with external pressure.

Variant 2
When filling the solution tank via port **(10)**, the pressure valve **(26)** can be set to the illuviation valve. At the same time, set the valve **(28)** to fresh water filling.

⚠ CAUTION

Filling via centrifugal pump if equipped with optional fresh water tank:
The suction line to the pump, the pump itself or the supply line to the illuviation valve may still contain spraying agent or deposits. When turning the valve **(28)** fresh water thus contaminated can be pumped into the fresh water tank!

- ➢ If necessary, flush the lines thoroughly before filling the fresh water tank!

Illuviation valve (5) pressure output:

This sucks in preparations from the illuviation valve into the spraying mixture container.
The fluid supplies the rinsing nozzles **(46)** and the shock nozzles **(48)** and canister flushing **(47)** of the illuviation valve.

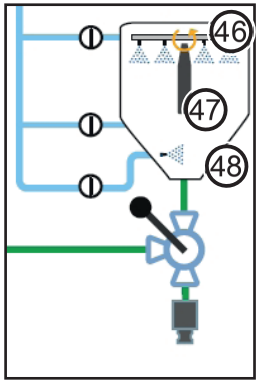

Spraying operation

The spraying pump **(23)** sucks in fluid through the suction fitting **(12)** from the spraying mixture container **(1)** (spraying operation) or from the fresh water tank **(2)** (cleaning of the spraying system).

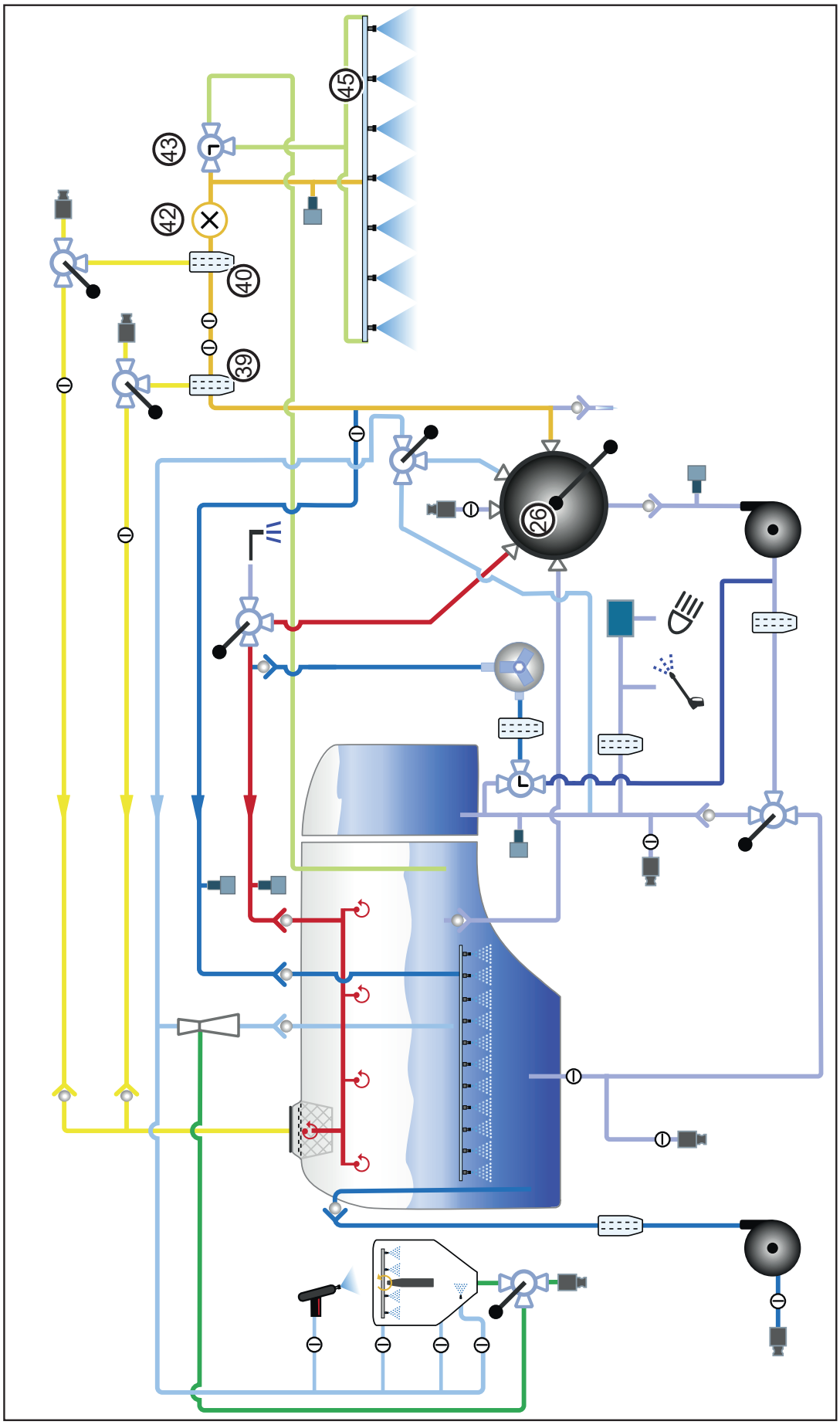
45
43
42
40
39
26

Spraying operation

Turn the pressure valve **(26)** to spraying operation.
In spraying operation the sucked in fluid is directed through the pressure filters **(39, 40)** and the flow meter **(42)** into the folding boom **(45)**.

The circulation valve **(43)** is in position **(a)**, so that pressure builds up in the spraying line and the wash is pressed to the nozzles from both sides.

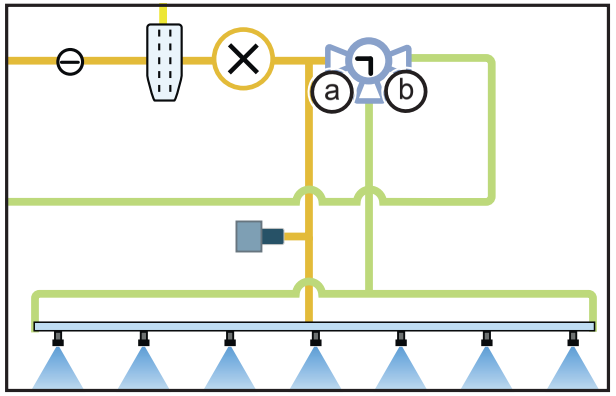

Circulation

With the nozzles switched off, the circulation valve **(43)** is in position **(b)**, so that the wash flows through the circulation system back into the spraying mixture container. This prevents the formation of deposits. Wash is immediately available at the nozzles when switching on.
Due to the permanent circulation of the biocatalytic solution through the complete spraying line, wash is constantly present at all nozzles while the nozzles are switched off.
Even when switching on individual sections or the entire spraying line for the first time, the biocatalytic solution is directly and well mixed available.
This circulation successfully prevents the formation of deposits and blockage.

Fluid circuit

Design of Water system Basic Pro and water system CCS Pro

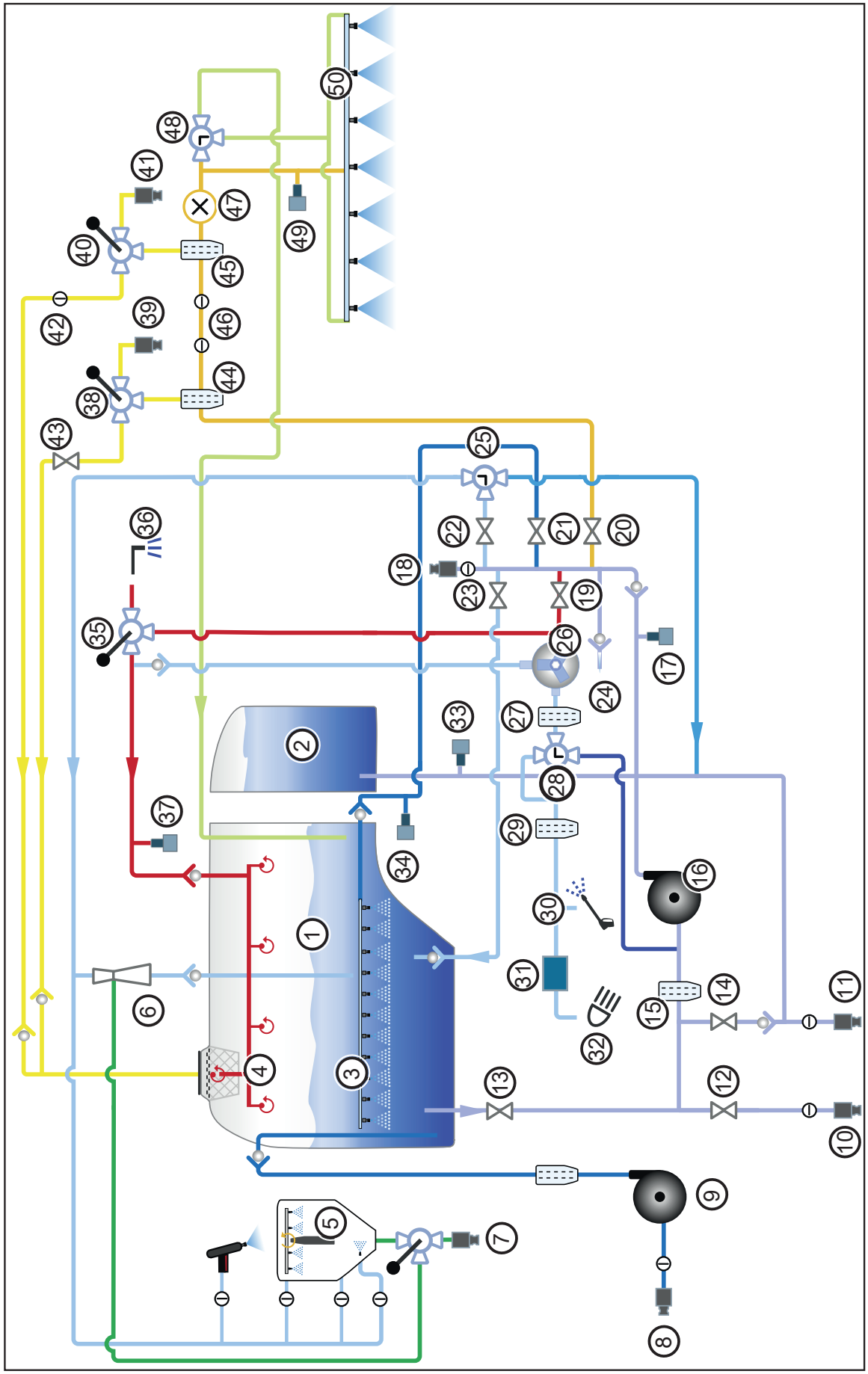

1 Spraying mixture container
2 Fresh water tank
3 Agitator
4 Internal cleaning
5 Illuviation valve
6 Injector
7 Eco Fill
8 External filling front right (optional)
9 PowerFill active filling pump (optional)
10 Direct filling/residue drain
11 Fresh water filling
12 Switch-over ball valve, external suction
13 Switch-over ball valve, solution
14 Fresh water switch-over ball valve
15 Suction filter with drain valve
16 Centrifugal pump
17 Spraying pump pressure sensor
18 External pressure output
19 Internal cleaning pressure output
20 Folding boom pressure output
21 Agitator pressure output
22 Illuviation valve/optional fresh water pressure output
23 Filling pressure output
24 Air valve (optional)
25 Switch-over ball valve illuviation valve/fresh water tank filling (optional)
26 Piston diaphragm pump (only with CCS Pro)
27 Suction filter piston diaphragm pump (only with CCS Pro)
28 Switch-over ball valve fresh water/suction aid (only with CCS Pro)
29 Filter NightLight/outside cleaning (optional)
30 High pressure cleaner (optional)
31 Electrical pump NightLight cleaning (optional)
32 NightLight with cleaning (optional)
33 Filling level sensor, fresh water
34 Agitator pressure sensor
35 Switch-over ball valve outside/internal cleaning (optional)
36 Outside cleaning (optional)
37 Internal cleaning pressure sensor
38 3-way valve pressure filter
39 Pressure filter drain
40 3-way valve pressure filter
41 Pressure filter drain
42 Pressure filter flushing, mechanical (adjustable intensity)
43 Pressure filter flushing, electrical
44 Pressure filter
45 Pressure filter
46 Folding boom supply lock valve (2x)
47 Flow meter
48 Switch-over ball valve circulation/spraying
49 Pressure sensor folding boom
50 Folding boom

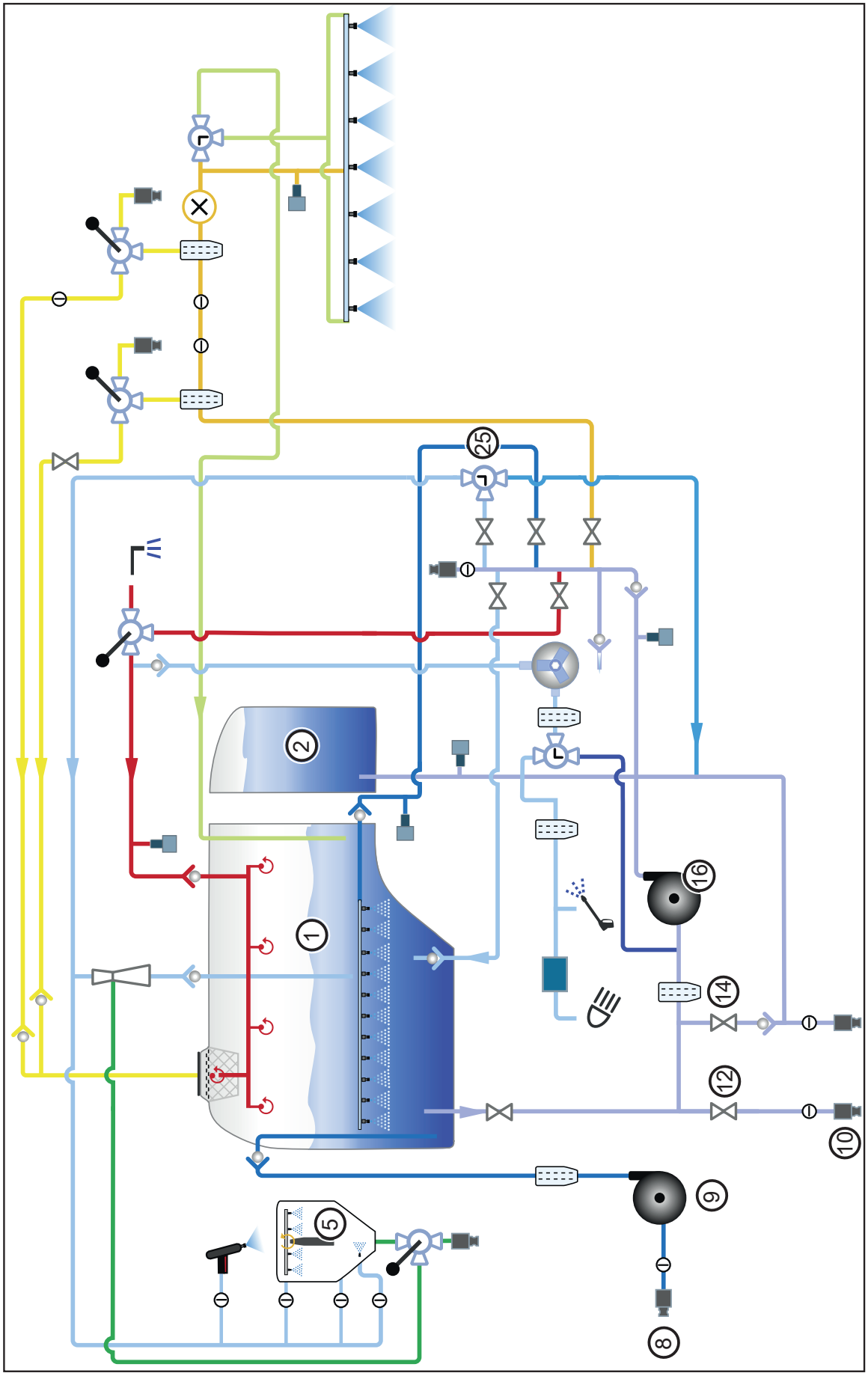
1
2
5
8
9
10
12
14
16
25

Solution tank filling

Several filling variants are available.

1) Water system CCS Pro: Through the standard connection **(10)** or through any other pressure output, the fluid can be pumped directly into the spraying mixture container (1) or to any other pressure outlet. Illuviation valve, circulation line/agitator, internal cleaning. Select the different variants for this purpose on the external control terminal.
Water system Basic Pro: Recommendation, fill the machine with an external filling pump.

Variant 2: Optionally via direct filling port **(8)**. The sucked in fluid can be transported directly into the spraying mixture container **(1)** via an external pump.

Variant 3: The fluid can be sucked in and transported directly into the spraying mixture container via port **(8)** and the optionally installed pump **(9)**.

Fresh water tank filling:

Variant 1:
Fill via **(11)** with external pressure.

Variant 2 (optional):
Switch on external suction on the external control terminal. Switch on the illuviation valve when the remaining solution was displaced by the lines into the spraying mixture container. Turn the valve **(25)** to fresh water filling. Then fill the fresh water tank.

⚠ CAUTION

Filling via centrifugal pump if equipped with optional fresh water tank:
The suction line to the pump, the pump itself or the supply line to the illuviation valve may still contain spraying agent or deposits. When turning the valve **(25)** fresh water thus contaminated can be pumped into the fresh water tank!

- ➢ If necessary, flush the lines thoroughly before filling the fresh water tank!

Illuviation valve (5) pressure output:

This sucks in preparations from the illuviation valve into the spraying mixture container.
The fluid supplies the rinsing nozzles **(51)** and the shock nozzles **(52)** and canister flushing **(53)** of the illuviation valve.

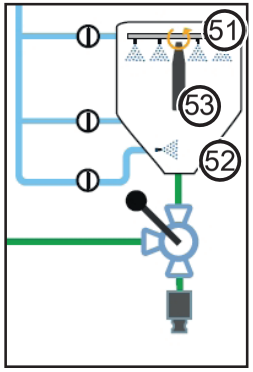

Spraying operation

The spraying pump **(16)** sucks in fluid through the suction fitting **(12 or 14)** from the spraying mixture container **(1)** (spraying operation) or from the fresh water tank **(2)** (cleaning of the spraying system).

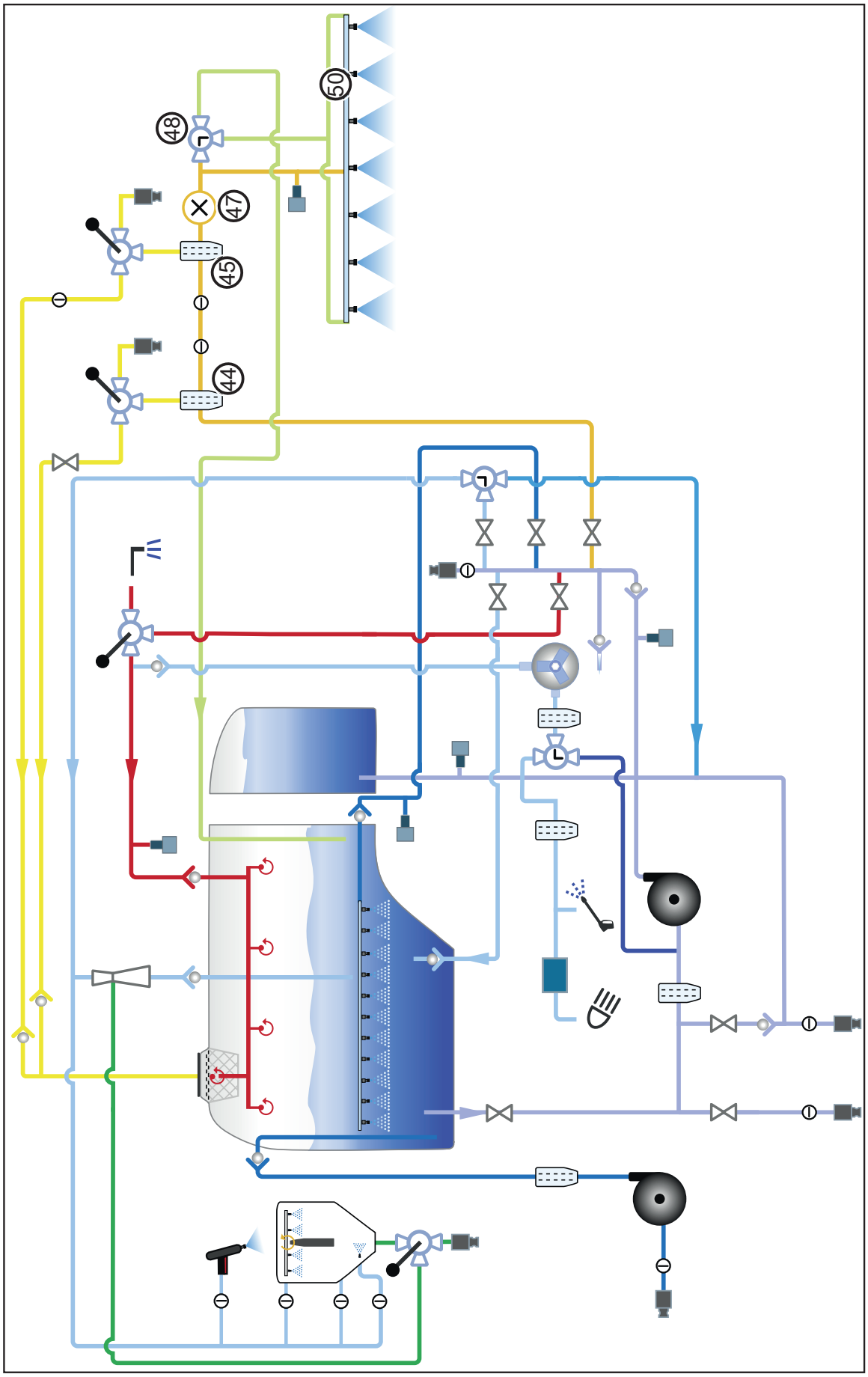
50
48
47
45
44

Spraying operation

Activate the circulation on the terminal for this purpose.
In spraying operation the sucked in fluid is directed through the pressure filters **(44, 45)** and the flow meter **(47)** into the folding boom **(50)**.

The circulation valve **(48)** is in position **(a)**, so that pressure builds up in the spraying line and the wash is pressed to the nozzles from both sides.

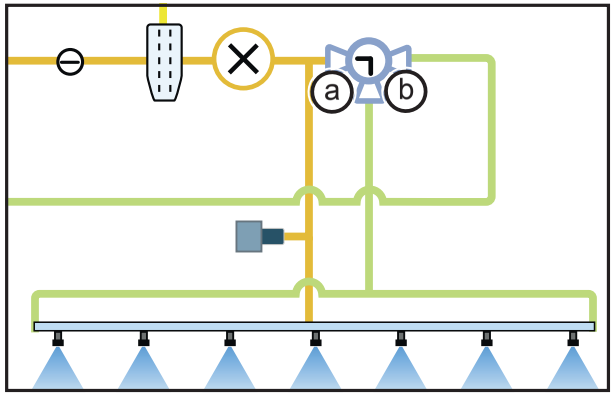

Circulation

With the nozzles switched off, the circulation valve **(48)** is in position **(b)**, so that the wash flows through the circulation system back into the spraying mixture container. This prevents the formation of deposits. Wash is immediately available at the nozzles when switching on.
Due to the permanent circulation of the biocatalytic solution through the complete spraying line, wash is constantly present at all nozzles while the nozzles are switched off.
Even when switching on individual sections or the entire spraying line for the first time, the biocatalytic solution is directly and well mixed available.
This circulation successfully prevents the formation of deposits and blockage.

Filling with water

NOTE

When filling, pay attention to the permissible payload of your crop protection sprayer!

When filling the crop protection sprayer you must strictly consider the different specific densities [kg/l] of the individual fluids!

Fluid	Density
Water	1 kg/l [8.34 lb/gal]
Carbonyl diamide	1.11 kg/l [9.3 lb/gal]
Ammonium nitrate - carbonyl diamide solution	1.28 kg/l [10.65 lb/gal]
NP-solution	1.38 kg/l [11.50 lb/gal]

Example: At 4000 l [1057 gal] UHN (ammonium nitrate - carbonyl diamide solution) the spraying mixture container is filled with a weight of 4000 l x 1.28 kg/l = 5120 kg [1057 gal x 10.65 lb/gal = 11257 lb]!

The crop protection sprayer can be filled via the filling ports or the dome.

WARNING

Danger to persons / animals due to accidental contact with spraying mixture when filling the spraying mixture container!

- The national and country-specific regulations for filling crop protection sprayers must be observed!
- Wear your personal protective outfit when processing crop protection agents or draining spraying mixture from the spraying mixture container.

  The required personal protective outfit depends on the information of the manufacturer, the product information, the instructions for use, the safety data sheet or the operating instructions for the crop protection agent to be used.
- Before each filling check the crop protection sprayer for damage, e.g. leaking tanks and hoses as well as the correct positioning of all operating elements.
- Never leave the crop protection sprayer unattended during filling.
- Never exceed the rated volume when filling the spraying mixture container.
- Never exceed the permissible payload of the crop protection sprayer when filling the spraying mixture container.
- Pay attention to the specific weight of the fluid to be filled in.
- When filling constantly keep an eye on the level gauge to avoid overfilling of the spraying mixture container.
- When filling the spraying mixture container pay attention to sealed surfaces, so that no wash runs into the sewer system.
- No foam must escape from the spraying mixture container during filling.

  A large cross-section funnel that reaches down to the bottom of the spraying mixture container most effectively prevents the formation of foam.

  Adding an anti-foaming agent will also prevent overflowing of foam of the spraying mixture container.

Filling via the dome

- Fasten the end of the filling hose at least 10 cm [3 in.] above the dome of the spraying mixture container.

  The free outflow created this way offers the highest level of safety against the back flow of spraying mixture into the drinking water line.

  The dome screen must always be inserted in the spraying mixture container.

Filling the spraying mixture container through the filling port

Water systems Basic and water system CCS

The national laws and relevant regulations for filling the spraying mixture container via the suction hose from open water tapping points must be complied with.

- When ready to suction: Close the solution tank valve / maintenance valve.
- The sucked in preparation must be at the same level as the spraying pump and flow into the pump on its own.
- Always keep an eye on the level gauge while filling.
- Stop filling the spraying mixture container at the latest when the filling limit has been reached.

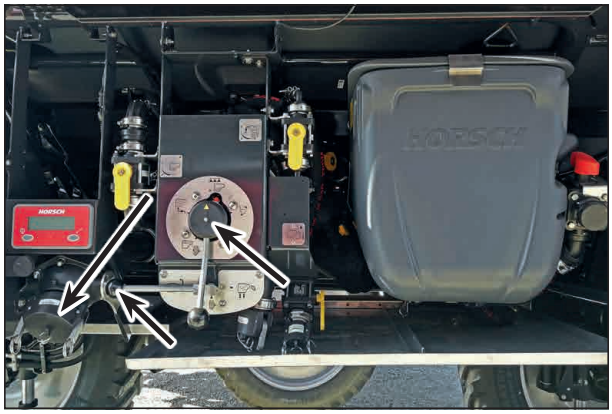

Filling port for spraying mixture container and pressure side valve

1. Connect the suction hose to the filling connection.
2. Open the filling valve.
3. Move the pressure side valve to the desired position.
4. Start the filling process via the external control terminal.
5. The filling process can be aborted at any time.
6. Using the *Pulling suction* function on the external control terminal, the supply line to the filling valve can be sucked empty.
7. Close the filling valve.
8. Uncouple the suction hose.
9. Close the connection with the cap.

Water systems Basic Pro and water system CCS Pro

The national laws and relevant regulations for filling the spraying mixture container via the suction hose from open water tapping points must be complied with.

- The sucked in preparation must be at the same level as the spraying pump and flow into the pump on its own (not necessary for CCS Pro).
- Always keep an eye on the level gauge while filling.
- Stop filling the spraying mixture container at the latest when the filling limit has been reached.

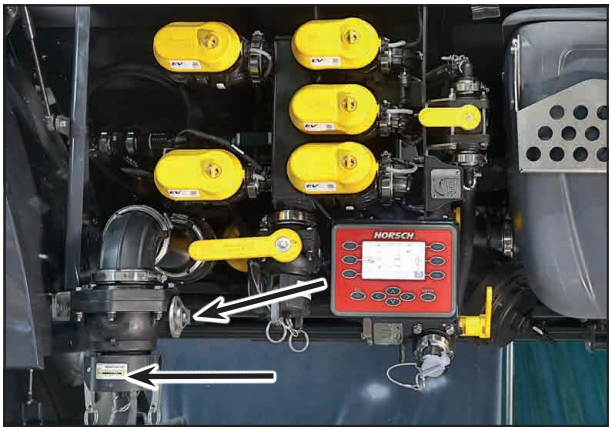

Filling port for spraying mixture container

1. Enter the desired container content on the terminal.
2. Connect the suction hose to the filling connection.
3. Open the filling valve.
4. Start the filling process via the external control terminal.
5. The suction fitting switches off automatically when the desired filling level is reached.

   The filling process can be aborted at any time.
6. Using the *Pulling suction* function on the external control terminal, the supply line to the filling valve can be sucked empty.
7. Close the filling valve.
8. Uncouple the suction hose.
9. Close the connection with the cap.

Direct filling / external filling without pump (optional)

At the direct filling port fluid from an external tank can be pressed directly into the spraying mixture container.

- Always keep an eye on the level gauge while filling. No automatic shut-down when the spraying mixture container is full!
- Stop filling the spraying mixture container at the latest when the filling limit has been reached.
- Pay attention to the max. permissible flow rate. It must not exceed 1000 l/min [264 gal/min].

Direct filling port (right side of machine, filter optional)

1. Connect the filling hose.
2. Open the filling valve.
3. Fill the spraying mixture container.
4. Close the filling valve.
5. Uncouple the hose.
6. Close the connection with the cap.

Direct filling / external filling with pump (optional)

At the direct filling port fluid from an external tank can be pressed directly into the spraying mixture container.

- Pump switches off when the filling limit is reached.

NOTE

The pump is not equipped with dry running protection.

- The pump must always be filled with fluid.

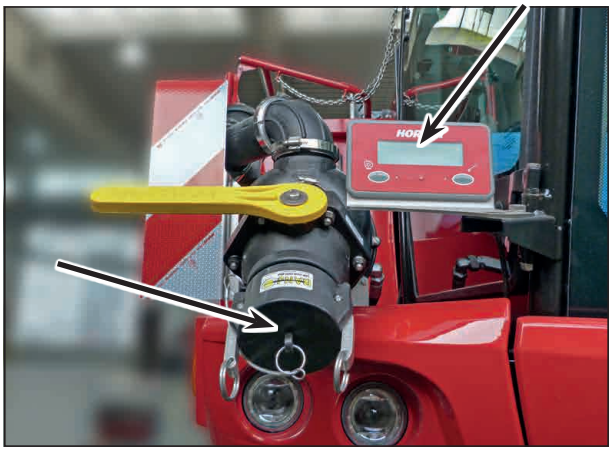

Suction port (right side of machine)

1. Connect the filling hose.
2. Open the filling valve.
3. Start pump via the external control panel.
4. Stop pump at desired tank content via the external control panel.
5. Close the filling valve.
6. Uncouple the hose.
7. Close the connection with the cap.

Filling via the dome

- Always keep an eye on the level gauge while filling. No automatic shut-down when the spraying mixture container is full!
- Stop filling the spraying mixture container at the latest when the filling limit has been reached.

1. Determine the exact filling quantity. Refer to the chapter *Calculating filling/refill quantities*.
2. Open the lid of the dome from the platform.
3. Fill the spraying mixture container through the filling opening using a water line with “free outflow”.
4. Stop filling the spraying mixture container as soon as the filling limit has been reached.
5. Close the lid of the dome from the platform.

Dome

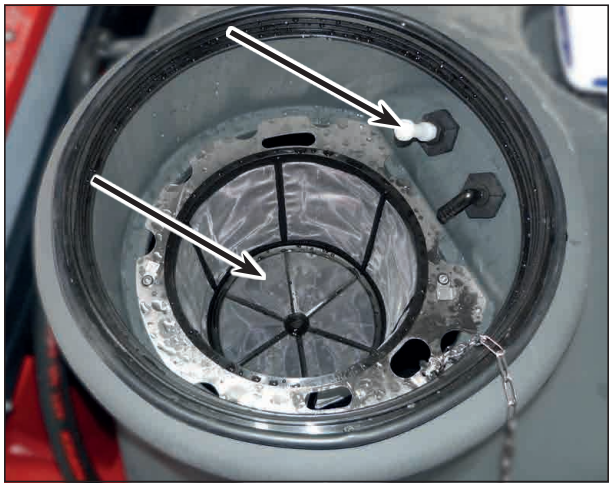

Dome screen and dome cleaning nozzle

NOTE

The dome screen must be checked daily and cleaned as necessary!

Filling the fresh water tank through the filling port

WARNING

Avoid impermissible contamination of the fresh water tank with crop protection agent or spraying mixture!

NOTE

Fill the fresh water tank only with clear water, never with crop protection agent or spraying mixture!

- Always keep an eye on the level gauge while filling. No automatic shut-down when the fresh water tank is full!
- Stop filling the fresh water tank at the latest when the filling limit (750 l) [200 gal] is reached.

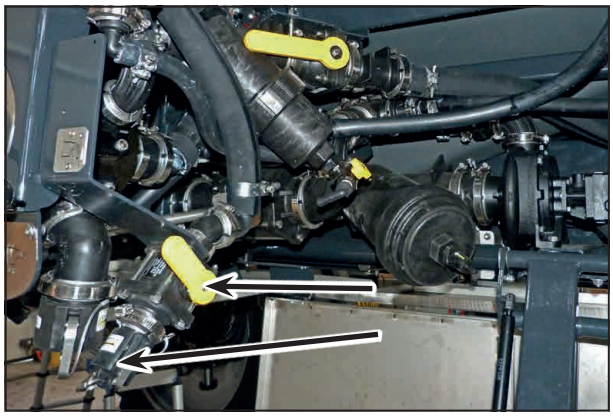

Filling port and filling valve for fresh water tank

1. Connect the filling hose.
2. Open the filling valve.
3. Fill the fresh water tank.
4. Close the filling valve.
5. Uncouple the hose.
6. Close the connection with the cap.

Always have a sufficient amount of fresh water on board when using the crop protection sprayer. When filling the spraying mixture container check and refill also the fresh water tank.

Illuviation of preparations

Illuviation valve

⚠ DANGER

Wear appropriate protective outfit for the illuviation of the preparations.
Observe the regulations and notes as well as the safety data sheet of the crop protection agent manufacturer!

⚠ NOTE

Turn on the agitator for filling and the illuviation of preparations. To maintain a homogeneous mix, the agitator should remain activated until the spraying operation is finished. The intensity of the agitator can be set via the external control terminal (only with water systems Basic Pro and CCS Pro)
Observe the regulations and notes of the crop protection agent manufacturer!

⚠ NOTE

Depending on the position of the ball valve of the suction side, water exits from the fresh water tank or spraying mixture from the spraying mixture container on the illuviation valve.

Crop protection agent and carbonyl diamide are poured into the illuviation valve, dissolved and drawn in.
Swing the illuviation valve down by pulling it by the handle.

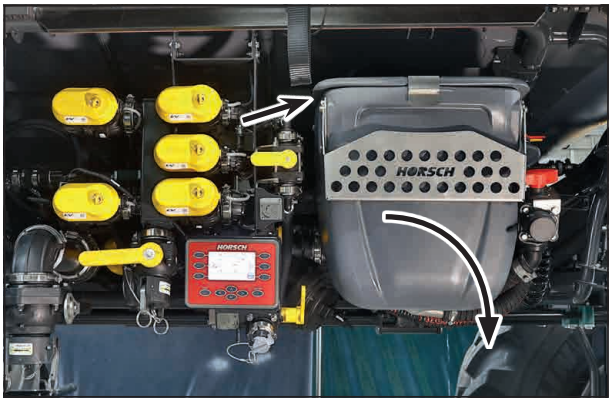

Flush the respective preparation through the illuviation valve into the water of the spraying mixture container. A difference is in this case made between the illuviation of fluid and powdery preparations or carbonyl diamide.

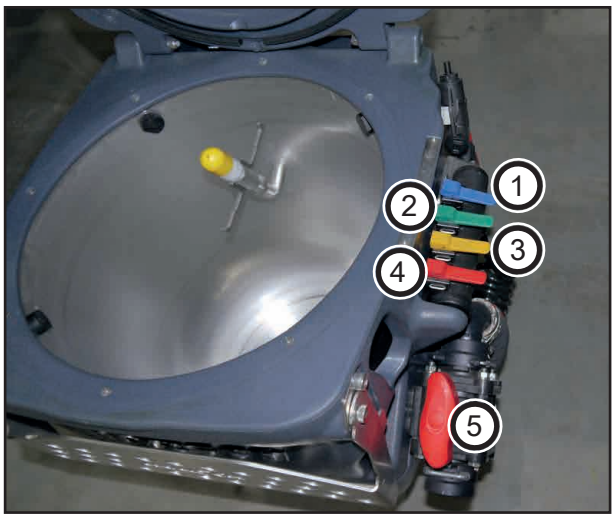

1 Activate/deactivate the canister flushing
2 Activate/deactivate the washing gun
3 Activate/deactivate the shock nozzles
   - ➢ The shock nozzles support the illuviation of difficult to dissolve crop protection agents.
   - ➢ Two rinsing nozzles and the shock nozzles in the lower area of the Illuviation valve are activated.
4 Activate/deactivate the washing nozzles
5 Switch-over ball valve for sucking-off and external filling devices

⚠ NOTE

Care must be taken when cleaning the illuviation valve that no undesirable point-type entries of preparations are generated!

Flushing in liquid preparations during filling

Water systems Basic and water system CCS

1. Connect the suction hose to the filling connection.

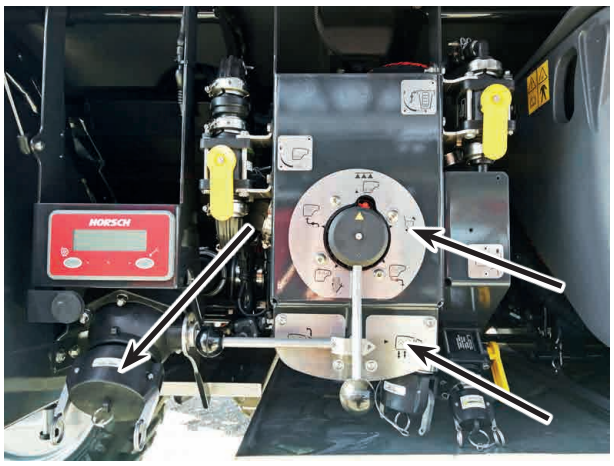

Filling port

2. Open the filling valve.
3. Set the pressure side valve to illuviation valve.
4. Turn the suction side valve to external suction.
5. Switch on the pump on the terminal.
6. Open the lid on the illuviation valve.
7. Fill the preparation quantity calculated and measured for filling the tank into the illuviation valve.
8. Turn the switch-over ball valve (5) to the position for sucking-off. Have the content completely sucked off from the illuviation valve.
9. Close the switch-over ball valve (5) again. The process may need to be repeated if the required preparation could not be filled in during a single process.
10. Pre-clean the illuviation valve with the rinsing nozzles (4).
11. Open the switch-over ball valve (5) and have the contents sucked off.
12. Close the switch-over ball valve (5) again.
13. Switch off the pump on the terminal.
14. Set the pressure side valve to filling
15. Top up the water shortfall.
16. Adjust the desired agitator power.

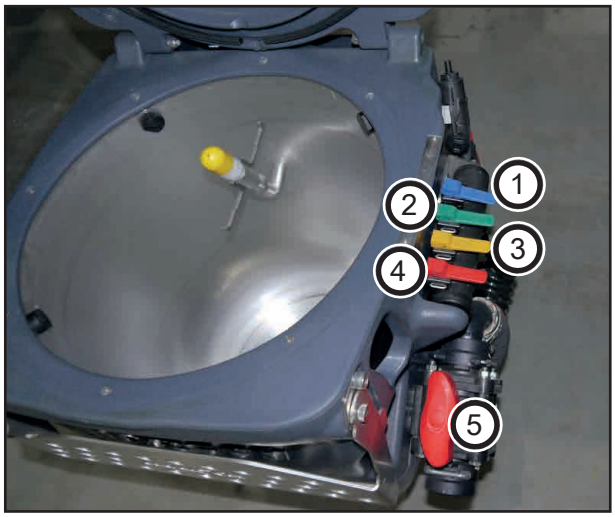

During the filling process the water sucked in through the suction hose is present at the illuviation valve.
Stop filling when the desired tank content has been reached.

Use the washing gun to remove any residues from the illuviation valve. Pull lever (2) and operate the gun.
Make sure that no undesired point-type entries of preparation are generated!

Flushing in liquid preparations during filling

Water systems Basic Pro and water system CCS Pro

1. Enter the desired container capacity in the terminal.
2. Connect the suction hose to the filling port and open the filling valve.

Filling port

3. Start filling via terminal.
4. Switch on the illuviation valve on the terminal.
5. Open the lid on the illuviation valve.
6. Fill the preparation quantity calculated and measured for filling the tank into the illuviation valve.
7. Turn the switch-over ball valve (5) to the position for sucking-off. Have the content completely sucked off from the illuviation valve.
8. Close the switch-over ball valve (5) again. The process may need to be repeated if the required preparation could not be filled in during a single process.
9. Pre-clean the illuviation valve with the rinsing nozzles (4).
10. Open the switch-over ball valve (5) and have the contents sucked off.
11. Close the switch-over ball valve (5) again.
12. Switch off the illuviation valve on the terminal.
13. Top up the water shortfall.
14. Adjust the desired agitator power.

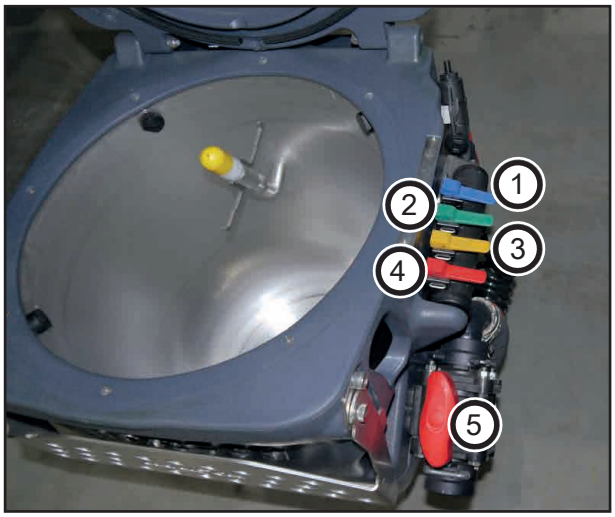

During the filling process the water sucked in through the suction hose is present at the illuviation valve.
Once the desired tank content is reached, the suction valve will automatically switch over to the spraying mixture container. Solution is then present at the illuviation valve.

Use the washing gun to remove any residues from the illuviation valve. Pull lever (2) and operate the gun.
Make sure that no undesired point-type entries of preparation are generated!

Flushing in liquid preparations with full or partly filled spraying mixture container

Water systems Basic and CCS

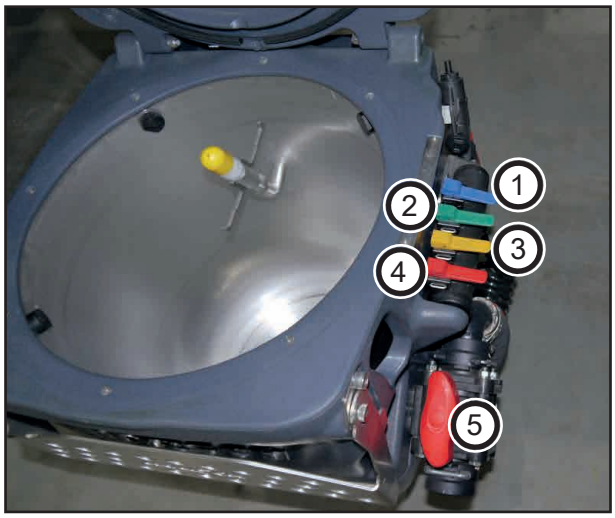

1. Open the lid on the illuviation valve.
2. Set the pressure side valve to illuviation valve.
3. Fill the preparation quantity calculated and measured for filling the tank into the illuviation valve.
4. Turn the switch-over ball valve (5) to the position for sucking-off. Have the content completely sucked off from the illuviation valve.
5. Close the switch-over ball valve (5) again. The process may need to be repeated if the required preparation could not be filled in during a single process.
6. Pre-clean the illuviation valve with the rinsing nozzles (4).
7. Open the switch-over ball valve (5) and have the contents sucked off.
8. Clean the illuviation valve with the washing gun.
9. Close the switch-over ball valve (5) again.
10. Set the pressure side valve to circulation/ stirring.
11. Adjust the desired agitator power.

Flushing in liquid preparations with full or partly filled spraying mixture container

Water systems Basic Pro and CCS Pro

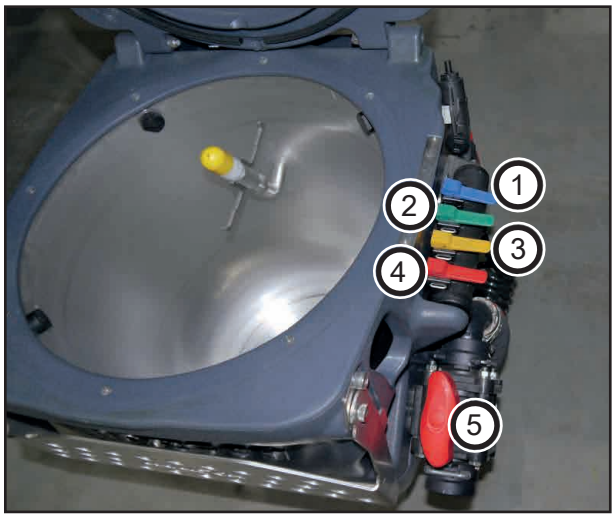

1. Open the lid on the illuviation valve.
2. Switch on the illuviation valve on the terminal.
3. Fill the preparation quantity calculated and measured for filling the tank into the illuviation valve.
4. Turn the switch-over ball valve (5) to the position for sucking-off. Have the content completely sucked off from the illuviation valve.
5. Close the switch-over ball valve (5) again. The process may need to be repeated if the required preparation could not be filled in during a single process.
6. Pre-clean the illuviation valve with the rinsing nozzles (4).
7. Open the switch-over ball valve (5) and have the contents sucked off.
8. Clean the illuviation valve with the washing gun.
9. Close the switch-over ball valve (5) again.
10. Switch off the illuviation valve on the terminal again.
11. Adjust the desired agitator power.

Flushing in powdery preparations and carbonyl diamide

Water systems Basic and CCS

NOTE

Exercise particular caution when handling powdery preparations or carbonyl diamide! Wear personal protective outfit! Observe the regulations and notes of the crop protection agent manufacturer!

Before spraying completely dissolve the carbonyl diamide by the activated agitator. Major temperature lowering of the spraying mixture occurs when dissolving larger quantities of carbonyl diamide. As a result, the carbonyl diamide dissolves only slowly. The warmer the water, the quick and better the dissolving of carbonyl diamide.

1. Fill the spraying mixture container with approx. 500 litres of [132 gal] of water.
2. Set the pressure side valve to illuviation valve.
3. Open the lid on the illuviation valve.
4. Turn the switch-over ball valve (5) to the position for sucking-off.
5. Turn on the rinsing nozzles (4).
6. Turn on the shock nozzles (3).
7. Fill the preparation quantity calculated and measured for filling the tank slowly into the illuviation valve.
8. Clean the illuviation valve with the washing gun.
9. Close the switch-over ball valve (5) again.
10. Set the pressure side valve to circulation/spraying.
11. Top up the water shortfall.
12. Adjust the desired agitator power.

Flushing in powdery preparations and carbonyl diamide

Water systems Basic Pro and water system CCS Pro

NOTE

Exercise particular caution when handling powdery preparations or carbonyl diamide! Wear personal protective outfit! Observe the regulations and notes of the crop protection agent manufacturer!

Before spraying completely dissolve the carbonyl diamide by the activated agitator. Major temperature lowering of the spraying mixture occurs when dissolving larger quantities of carbonyl diamide. As a result, the carbonyl diamide dissolves only slowly. The warmer the water, the quick and better the dissolving of carbonyl diamide.

1. Fill the spraying mixture container with approx. 500 litres of [132 gal] of water.
2. Switch on the illuviation valve on the terminal.
3. Open the lid on the illuviation valve.
4. Turn the switch-over ball valve (5) to the position for sucking-off.
5. Turn on the rinsing nozzles (4).
6. Turn on the shock nozzles (3).
7. Fill the preparation quantity calculated and measured for filling the tank slowly into the illuviation valve.
8. Clean the illuviation valve with the washing gun.
9. Close the switch-over ball valve (5) again.
10. Switch off the illuviation valve on the terminal again.
11. Top up the water shortfall.
12. Adjust the desired agitator power.

Canister cleaning

Water systems Basic and water system CCS

Pre-cleaning the canister with spraying mixture

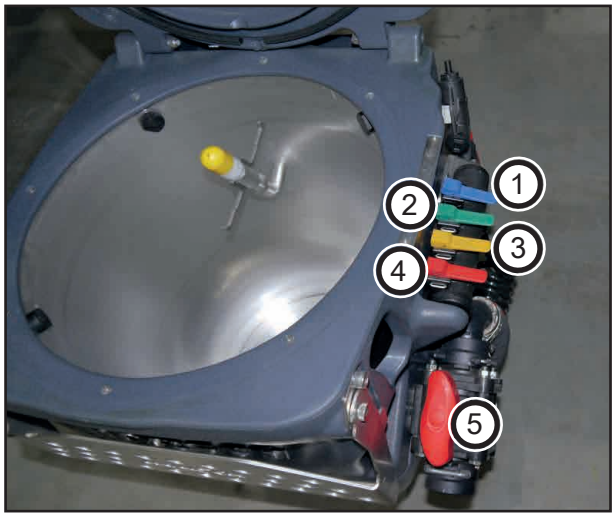

1. Open the lid on the illuviation valve.
2. Set the pressure side valve to illuviation valve.
3. Set the switch-over ball valve (5) to sucking-off.
4. Switch on canister flushing (1).
5. Put the canister or any other container over the canister flushing facility and press it down for at least 30 seconds. Turn the containers during this process.
6. Turn off canister flushing (1) again.
7. Close the switch-over ball valve (5) again.
8. Set the pressure side valve to filling.

NOTE

Water or chemical emerges from the canister flushing nozzle when the pressure plate is pressed down.

Canister cleaning with fresh water

NOTE

Cleaning the canisters with fresh water dilutes the spraying mixture concentration!

1. Open the lid on the illuviation valve.
2. Turn the suction side 3-way valve to *Suck from fresh water tank*.
3. Set the pressure side valve to illuviation valve.
4. Set the switch-over ball valve (5) to sucking-off.
5. Switch on canister flushing (1).
6. Put the canister or any other container over the canister flushing facility and press it down for at least 30 seconds. Turn the containers during this process.
7. Turn off canister flushing (1) again.
8. Clean the illuviation valve with the washing gun.
9. Close the switch-over ball valve (5) again.
10. Set the pressure side valve to filling.

NOTE

Water exits from the canister flushing, when the pressure plate is pressed down.

Canister cleaning

Water systems Basic Pro and water system CCS Pro

Pre-cleaning the canister with spraying mixture

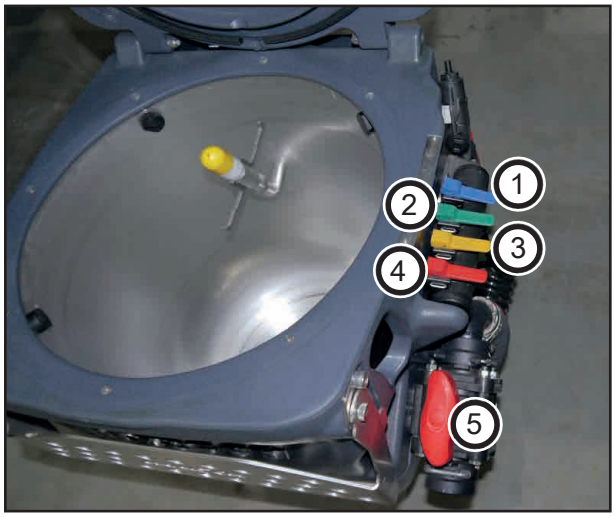

1. Open the lid on the illuviation valve.
2. Switch on the illuviation valve on the terminal; the spraying pump starts automatically.
3. Set the switch-over ball valve (5) to sucking-off.
4. Switch on canister flushing (1).
5. Put the canister or any other container over the canister flushing facility and press it down for at least 30 seconds. Turn the containers during this process.
6. Turn off canister flushing (1) again.
7. Close the switch-over ball valve (5) again.
8. Switch off the illuviation valve on the terminal.

⚠ NOTE

Water or chemical emerges from the canister flushing nozzle, when the pressure plate is pressed down.

Canister cleaning with fresh water

⚠ NOTE

Cleaning the canisters with fresh water dilutes the spraying mixture concentration!

1. Open the lid on the illuviation valve.
2. To be able to use clean water for illuviation, the function *Recirculate fresh water* and the *illuviation valve* must be activated on the terminal.
   - ➢ Switch on the illuviation valve on the terminal. The spraying pump starts automatically.
3. Set the switch-over ball valve (5) to sucking-off.
4. Switch on canister flushing (1).
5. Put the canister or any other container over the canister flushing facility and press it down for at least 30 seconds. Turn the containers during this process.
6. Turn off canister flushing (1) again.
7. Clean the illuviation valve with the washing gun.
8. Close the switch-over ball valve (5) again.
9. Deactivate the *Recirculate fresh water* function and switch off the illuviation valve on the terminal.

⚠ NOTE

Water exits from the canister flushing, when the pressure plate is pressed down.

Empty preparation containers

- Thoroughly wash out empty preparation containers, make them unusable, collect then and dispose of according to regulations. Do not use for other purposes.
- If only spraying mixture is available for cleaning the preparation containers, you should just use this for preliminary cleaning.

  Thoroughly clean if clear water is available, e.g. before preparing the next spraying mixture container filling or when diluting the residual quantity of the last spraying mixture container filling.

Close the lid of the illuviation valve again after all preparations have been flushed in and the illuviation valve and all containers have been cleaned. Swivel the illuviation valve again upward to the transport position with the handle.

Spraying operation

- Before starting the spraying operation exactly determine the necessary **application quantity** by using the instructions for use issued by the crop protection agent manufacturer.
- Enter the required application quantity (nominal quantity) into the **terminal** before starting the spraying operation.
- Strictly adhere to the required application quantity [l/ha] during spraying operation,
  - to achieve an optimal treatment success with this crop protection measure.
  - to avoid unnecessary impact on the environment.
- Choose the required **nozzle type** from the spraying table before starting spraying – under due consideration
  - of the intended travel speed.
  - required application quantity.
  - required atomizing characteristic (fine, medium, or large drops) of the crop protection agent used for the crop protection measure to be carried out.
  - recommended distances.
  - See also chapter *Nozzle selection*.
- Choose the required **nozzle size** from the spraying table before starting spraying – under due consideration
  - of the intended travel speed.
  - of the required application quantity.
  - the planned spraying pressure.
  - See also chapter *Nozzle selection*.
- Choose a slow travel speed and a low spraying pressure to prevent losses by windward drifting!
  - See also chapter *Nozzle selection*.
- Apply additional measures for windward drift reduction at wind speeds of 3 m/s [9 ft/s].
  - See chapter *Measures for windward drift reduction*.
- Do not apply at average wind speeds higher than 5 m/s [16 ft/s].
- Switch the nozzles on and off only when driving to avoid overdosing.
- Avoid overdosing caused by overlapping
  - in case of inaccurate joining passes from one spraying track to the next and/or
  - when cornering at the headland with spraying boom switched on!
- Switch off the outer sections if the edge of the cultivation area runs at an angle to the cultivation area.
- During spraying operation keep an eye on the actual spraying mixture consumption in relation to the treated area. In case of discrepancies between the actual and the displayed placing quantity calibrate the flow meter.
  - Teach procedures must be carried out by HORSCH service staff.
- In case of deviations between the actual and the displayed distance calibrate the position sensor (pulses per 100 m [328 ft]). This activity should always be executed in the field.
  - Teach procedures must be carried out by HORSCH service staff.
- In case of weather related interruptions of spraying operation it is mandatory to clean filters, pump, fitting and spraying lines!

Folding boom control

⚠ WARNING

Danger of crushing and impact for persons staying in the danger zone when lifting or lowering for height adjustment of the spraying boom!

Instruct persons to leave the danger zone around the machine before lifting or lowering the spraying boom by means of the height adjustment.

⚠ NOTE

Adjust the spraying height (distance between nozzles and crop) as per currently applicable guidelines.

Always adjust the spraying boom parallel to the ground, because the specified spraying height can only be achieved in this condition.

Control and regulation of spraying functions

Spraying pressure, nozzle size, placing quantity, travel speed, agitator

The spraying mixture container is empty when the spraying pressure suddenly drops significantly.

Should the spraying pressure drop under otherwise unchanged conditions, the suction or pressure filters are blocked.

Spraying pressure and nozzle size have an influence on the drop size and the sprayed-out fluid volume.
The higher the spraying pressure, the smaller the drop diameter of the sprayed spraying mixture. The smaller droplets are subject to higher, undesired windward drift!

- Increasing the spraying pressure also increases the placing quantity.
- Decreasing the spraying pressure also reduces the placing quantity.

Increasing the travel speed while leaving both nozzle size and spraying pressure unchanged, reduces the placing quantity.

Reducing the travel speed while leaving both nozzle size and spraying pressure unchanged, increases the placing quantity.

The travel speed is freely selectable, based on the automatic, area-related placing quantity control.

The agitator normally remains switched on from filling to the end of spraying. Observe the regulations and notes of the crop protection agent manufacturer.

Example:

Required application quantity:	200 l/ha [21 gal/ac]
Intended travel speed:	8 km/h [5 mph]
Nozzle type:	AI / ID
Nozzle size:	03
Permissible pressure range for the installed spraying nozzles:	3 bar [44 psi] (min.) – 8 bar [116 psi] (max.)
Intended spraying pressure:	3.7 bar [54 psi]
Permissible spraying pressures:	3.7 bar [54 psi] ±25% 2.8 bar [40 psi] (min.) - 4.6 bar [67 psi] (max.)

Spraying

1. Switch on the terminal.
2. Adjust the agitator.
3. Prepare the spraying mixture as specified by the crop protection agent manufacturer and stir it up.
4. Unfold the spraying boom.
5. Set the working height of the spraying boom (distance between nozzles and plants) in dependence of the nozzles used according to the spraying table.
6. In the terminal check the value “min. pressure” and “max. pressure” for the permissible spraying pressure range (for the installed spraying nozzles).
7. Enter the value for “Nominal quantity” for the required application quantity into the terminal or check the stored value.
8. Switch on spraying via the terminal.

NOTE

Comply with the applicable country specific regulations! Comply with regulations concerning the distance to waters and adjacent areas!

Travelling to the field with the agitator switched on

Water systems Basic and CCS:

- Set the pressure side valve to the spraying function.
- Adjust the intensity of the agitator at the corresponding valve.

Water systems Basic Pro and CCS Pro:

- The intensity of the agitator can be adjusted via the terminal.
- Switch on the agitator via the terminal

The required agitating power depends on the preparations used and must be checked by the user.

After filling the agitator may be set to maximum intensity to avoid separation during longer transport travels!

Before starting the spraying operation the stirring intensity set for travelling must be reset if it deviates from the stirring intensity required for spraying! Comply with the applicable country specific regulations!

Measures for windward drift reduction

- Schedule your work for early morning or evening (generally less wind).
- Reduce the spraying pressure.
- Choose bigger nozzles and higher water application quantities.
- Maintain the exact folding boom working height, because the risk of windward drift will increase considerably with increasing nozzle distance.
- Reduce the travel speed (below 8 km/h).
- Use of so-called antidrift (AD) nozzles or injector (ID) nozzles (nozzles with a high proportion of coarse drops).
- Follow the distance instructions for the corresponding crop protection agent.

Spraying with 25 cm [10 in.] Nozzle spacing and reduced target area distance

- The risk of windward drifting can be considerably reduced by reducing the target area distance to less than 50 cm [20 in].
- This reduction of the target area distance is only possible with a continuous 25 cm [10 in] nozzle spacing. Otherwise there is danger of strip formation caused by non-existing overlap of the spraying cones.
- A distance reduction is only possible if all nozzles used at a time are of the same type and the same size.
- The minimum target area distance corresponds to half the minimum target area distance for a corresponding 50 cm [20 in] nozzle pitch.
  - see nozzle manufacturer's data

Draining the spraying mixture container via the pressure output

Water systems Basic and CCS

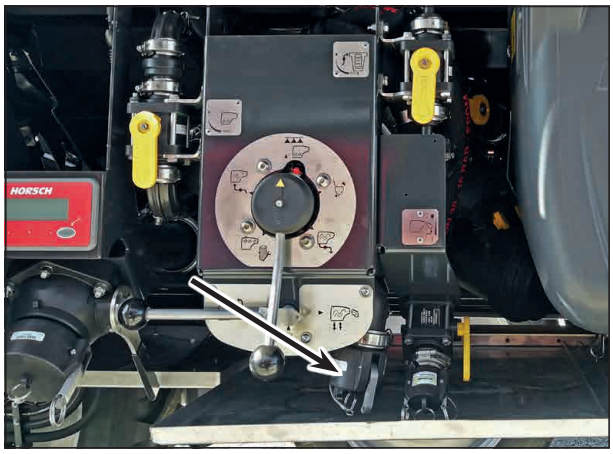

Pressure output

1. Couple a discharge hose with 2" Camlock coupling on the pressure output.
2. Open the ball valve.
3. Set the suction side to the desired tank.
4. Switch on the spraying pump on the terminal.
5. Drain the tank.
6. Switch off the spraying pump after drainage.
7. Close the ball valve and remove the discharge hose.
8. Close the pressure output with the cap.

Draining the spraying mixture container via the pressure output

Water systems Basic Pro and CCS Pro

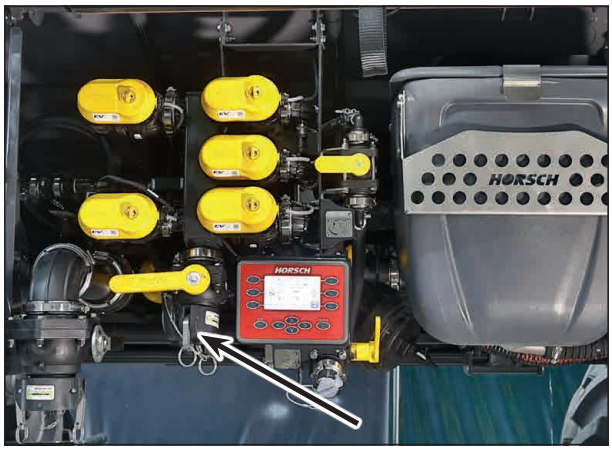

Pressure output

1. Couple a discharge hose with 2″ Camlock coupling on the pressure output.

NOTE

Drainage output can be controlled with the ball valve.
If the valve is fully open, the pump delivers with full output via the pressure output.

2. Switch on the circulation on the terminal.
3. Drain the spraying mixture container.
4. After drainage switch off the circulation to shut off the pump.
5. Close the ball valve and remove the discharge hose.
6. Close the pressure output with the cap.

Residual quantities

A differentiation is made between two types of residual quantities:

- **Excess residual quantity** after the end of spraying operation, e.g. resulting from errors in the calculation of the application quantity, in filling or spraying operation.
- **Technical residual quantities**, which still remain in the spraying mixture container, the suction fitting and in the spraying line after a considerably drop in spraying pressure. The suction fitting consists of the assembly groups: switch-over ball valves, short lines and pump.

Technical residual quantities

Make sure that the residual quantity in the spraying line will be placed in the form of undiluted concentration. This is the case when switching to fresh water with the nozzles activated.
Strictly spray this residual quantity from the spraying line on an untreated area. The residual quantity in the spraying line depends on the width of the boom.

Required travel distance in [m] to spray out the undiluted residual quantity in the spraying line for all working widths:

[l/ha]	[m]
100 [11 gal]	83 [272 ft]
150 [16 gal]	55 [180 ft]
200 [21 gal]	41 [134 ft]
250 [27 gal]	33 [108 ft]
300 [32 gal]	28 [91 ft]
400 [43 gal]	20 [65 ft]

Example:
With an application quantity of 200 l/ha [21 gal/ac] the travel distance to spray out the residual quantity is approx. 41 m [134 ft].

Draining technical residual quantities

NOTE

Make sure that the residual quantity in the spraying line will be sprayed out in the form of undiluted concentration.

- Spray this residual quantity from the spraying line on an untreated area.
- Refer to the chapter *Technical residual quantities* for the travel distance required to spray the residual quantity in the spraying line. The residual quantity in the spraying line depends on the working width of the folding boom.
- Once the residual quantity in the spraying mixture container has reached a level of just 100 litres [26 gal] switch off the agitator to spray the spraying mixture container empty.

  With the agitator switched on the technical residual quantity increases in contrast to the specified values.

  With the water system Basic Pro and CCS Pro the agitator is automatically deactivated at a spraying mixture container content of less than 150 litres [40 gal]. With other water systems, the agitator must be switched off via the corresponding ball valves.
- Measures to protect the user must be applied when emptying residual quantities. Follow the instructions of the crop protection agent manufacturers and wear personal protective outfits.
- Dispose of the collected residual quantity of spraying mixture in accordance with the relevant statutory regulations.
- Collect the residual quantity of spraying mixture in suitable containers.
- Dispose of the residual quantity of spraying mixture with the stipulated waste disposal.

Draining technical residual quantities

The filling port is suitable for draining the technical residual quantities

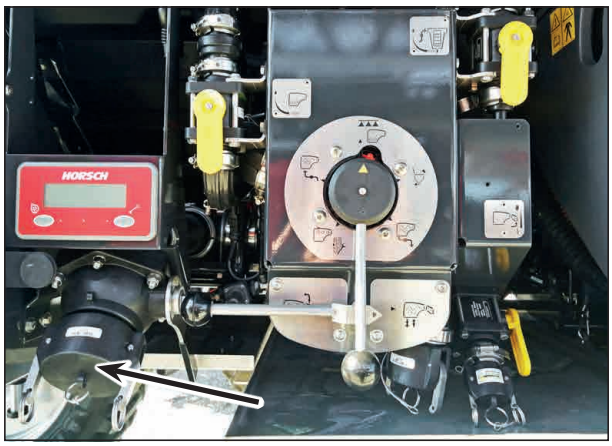

Port with cap for water systems Basic and CCS

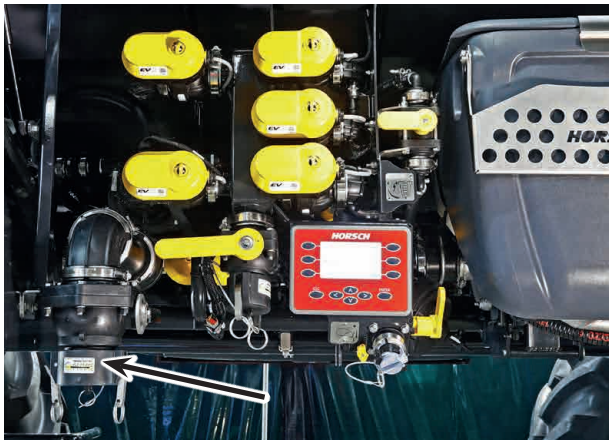

Port with cap for water systems Basic Pro and CCS Pro

Place a suitable collection vessel under the port for draining the residual quantity.

1. Take off the cap.
2. Open the valve.
3. Close the valve after draining is fully completed and close again with the cap.
4. Properly dispose of the collected residual quantity!

Diluted residual quantity

Perform the dilution and spraying out of residual quantity from the spraying mixture container after the end of spraying operation as follows:

Procedure

1. Spray the undiluted residual quantity from the spraying line on an untreated residual area.
2. Dilute the residual quantity in the spraying mixture container with 200 litres [52 gal] of fresh water.
3. Spray the diluted residual quantity also on an untreated residual area.
4. Repeat steps 2 and 3 for a second (if necessary a third) time.

Diluting the residual quantity

Water systems Basic and CCS

1. Turn the ball valve on the suction side to the fresh water position.
2. Turn the ball valve on the pressure side to the desired position.
3. Start the spraying pump on the terminal.
4. Stop the spraying pump when the desired spraying mixture tank content has been reached.
5. Turn the suction side valve to spraying mixture.
6. Set the pressure side valve to the desired position.

Water systems Basic Pro and CCS Pro

1. Call up the cleaning menu on the main control terminal.
2. Select the submenu Dilute spraying mixture or Recirculate fresh water into spraying mixture container.
3. Select the ratio of fresh water to spraying mixture.
4. Start the process.

In case of multiple nozzle systems all existing nozzles must be opened for cleaning. There is danger of deposits if this instruction is not followed!

Draining the fresh water tank

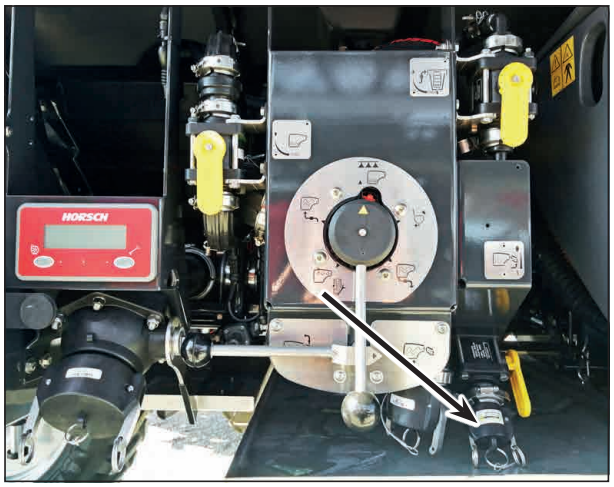

Port for water systems Basic and CCS fresh water tank

Port for water systems Basic Pro and CCS Pro fresh water tank

The port of the fresh water tank is located to the left of the illuviation valve. It serves to fill the fresh water tank and also to drain the fresh water. Remove the cap for drainage, open the ball valve and let the water drain out. Now shut the valve again and close the port with the cap.

⚠ WARNING

Danger of poisoning by contaminated water in the fresh water tank!
Do not use the water of the fresh water tank as drinking water!

Cleaning

⚠ WARNING

Danger of crushing, shearing, cutting, cutting off, being caught, winding up, being pulled in and impact caused by

- accidental lowering of lifted, unsecured machine parts.
- accidental starting and rolling of the machine.

Secure the machine against accidental starting and rolling before performing cleaning tasks on the machine.

Before starting cleaning work under the parallelogram of the folded folding boom, check the interlocking of the parallelogram.

⚠ WARNING

Danger of crushing, shearing, cutting, cutting off, being caught, winding up, being pulled in and impact caused by unprotected danger spots!

- Reattach protective features removed for cleaning the machine.
- Replace defective protective features with new ones. Use only HORSCH original parts.

⚠ CAUTION

Contamination with crop protection agents. Wear the personal protective outfit when cleaning the crop protection sprayer!

- Perform all maintenance work on the crop protection sprayer only after cleaning it.

- Pay particular attention to the brake, air and hydraulic lines.
- Never use gasoline, petroleum or mineral oils on brake, air and hydraulic oil lines.
- After cleaning, check all hydraulic lines for leaks and loose connections.
- Lubricate the crop protection sprayer after cleaning, especially after cleaning with a high pressure cleaner / steam jet or when using grease-dissolving cleaning agents.
- Pay attention to the statutory regulations concerning the handling and waste disposal of cleaning agents.
- Check for chafing and signs of damage. Remedy any faults immediately!
- Prior to working on the electrical system, disconnect it from the electric current supply.

Cleaning with high pressure cleaner / steam jet

⚠ NOTE

Do not clean **new machines** with a steam jet or high pressure cleaner.
The paint takes approx. 3 months to cure and could be damaged before this time.

Strictly observe the following points when cleaning with a high pressure cleaner/steam jet:

- Do not clean any electrical components.
- Do not clean any chrome-plated components.
- Before cleaning the machine cover all openings, which should stay clear of water, steam or cleaning agents for reasons of safety or functioning.
- Do not aim the water jet directly at electrical or electronic components and bearings. Keep the water jet at a distance of at least 150 cm. Use only a flat jet.
- Do not direct the cleaning jet of the high pressure cleaner/steam jet directly on lubrication points and bearings, lines and stickers.
- Always keep a minimum distance of 300 mm [12 in] between cleaning nozzle and machine.
- Avoid the use of dirt removing tools on the high pressure cleaner, if necessary, keep a greater distance.
- Pay attention to the safety regulations when using high pressure cleaners.

Cleaning the crop protection sprayer

NOTE

Regular cleaning of the crop protection sprayer is a prerequisite for proper maintenance and eases operation of the machine.

Service life and reliability of the crop protection sprayer essentially depend on the time the material of the crop protection sprayer is exposed to the crop protection agent.

- Keep the exposure time to the spraying mixture as short as possible, e.g. by daily cleaning after the end of spraying.
- Do not leave the spraying mixture for an unnecessary period of time in the spraying mixture container, e.g. not over night.
- Generally, clean the crop protection sprayer before placing a different crop protection agent.
- Dilute the residual quantity in the spraying mixture container and subsequently spray out the diluted residual quantity.
- Before the actual cleaning preliminarily cleaning of the crop protection sprayer should be done in the field.
- Dispose of any cleaning residues in an environmentally friendly manner each time after cleaning the crop protection sprayer.
- Disassemble the spraying nozzles at least once per season.
- Check the disassembled spraying nozzles for contamination, if necessary clean the nozzles with a soft brush.
- Flush the spraying lines without the spraying nozzles in place.

Cleaning the filters

A ring spanner for work on the pressure and suction filters is supplied with the machine. The ring spanner is located in the storage compartment at the left-hand side in the direction of travel.

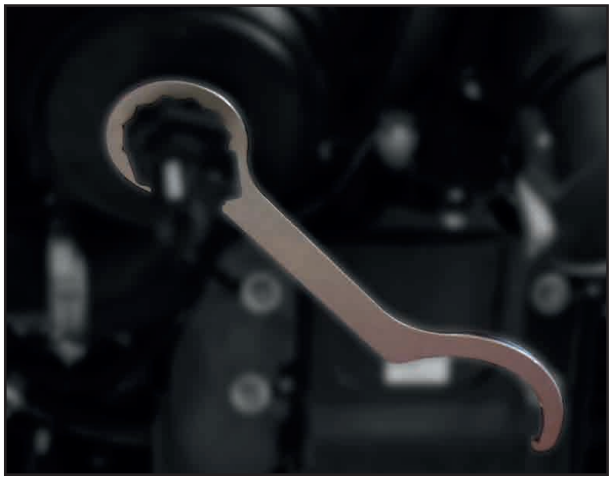

Filter wrench

Pressure filter

CAUTION

Spraying mixture running out! Wear personal protective outfit!

The pressure filter is located to the left of the illuviation valve.
The pressure value on the folding boom is shown on the terminal.

- Cleaning the filter daily.
- A warning appears on the terminal if the pressure differential is too high!
- An second pressure filter is installed on the centre piece of the folding boom. Refer to the *Auxiliary pressure filter* section.

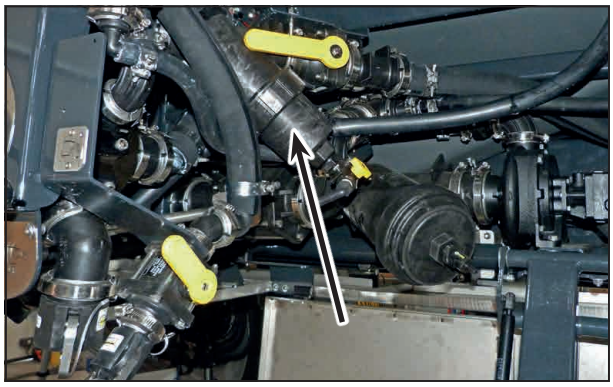

Pressure filter

Cleaning the pressure filter of water systems Basic and CCS

1. Switch (1) off the folding boom circulation.
2. Close the ball valve for folding boom supply.
3. Turn the pressure side valve to internal cleaning/maintenance of pressure filter.
4. Drain the filter housing. Open the drain valve (2) for this purpose. Collect used fluid and dispose of properly.
5. Unscrew the lid of the filter housing.
6. Remove the filter and clean/change it. Collect the deposits in a suitable tank and dispose of properly.
7. Insert the cleaned/new filter again and close the filter housing with the lid. Close the lock valve again.
8. Set the pressure side valve to the desired position.
9. Open the ball valve for folding boom supply.

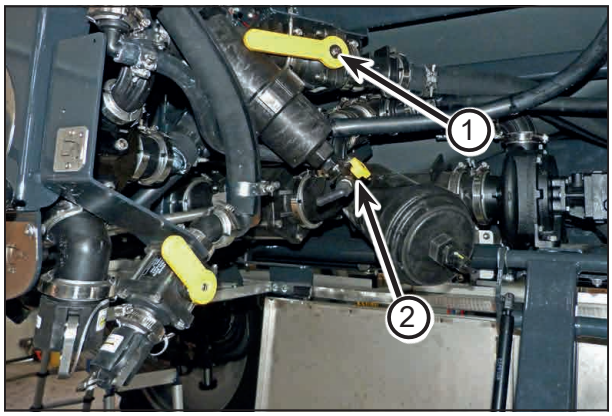

1 Folding boom circulation

2 Pressure filter drain valve

NOTE

Clean the thread of the filter housing if soiled.

Pressure filter cleaning of water systems Basic Pro and CCS Pro

1. Switch off the folding boom circulation.
2. Close the ball valve for folding boom supply (1).
3. Actuate the Filter cleaning function on the external control terminal.
4. Drain the filter housing. (2) Open the valve for this purpose. Collect used fluid and dispose of properly.
5. Unscrew the lid of the filter housing.
6. Remove the filter and clean/change it. Collect the deposits in a suitable tank and dispose of properly.
7. Insert the cleaned/new filter again and close the filter housing with the lid. Close the lock valve again.
8. Disable the filter cleaning function again on the external control terminal.

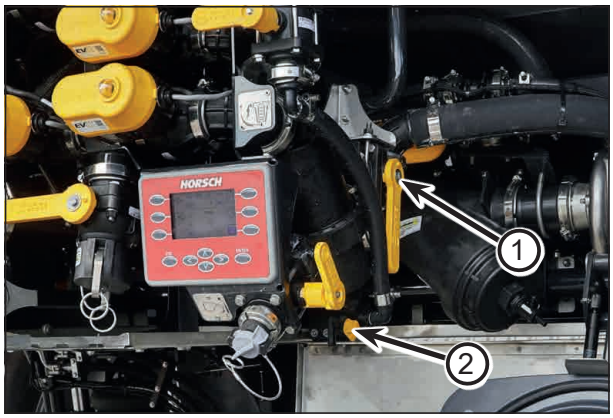

1 Folding boom circulation

2 Pressure filter drain valve

NOTE

Clean the thread of the filter housing if soiled.

Suction filter

⚠ CAUTION

Spraying mixture running out! Wear personal protective outfit!

⚠ NOTE

- Clean the filter after suctioning contaminated water.
- The suction filter should be cleaned daily to prevent dirt deposits in it. In addition, the pressure output should be rinsed.

The suction filter of the centrifugal pump located to the left of the illuviation valve.

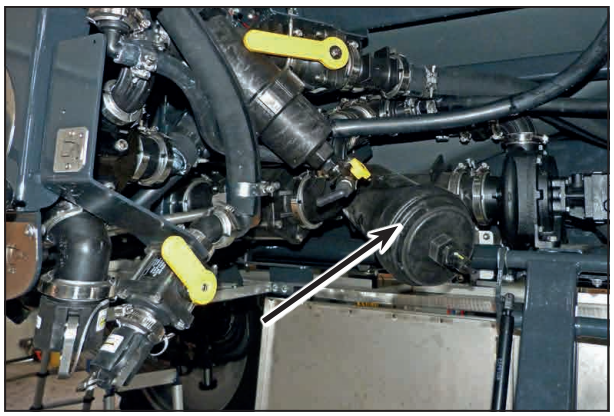

Centrifugal pump suction filter

Cleaning the centrifugal pump suction filter of water systems Basic and CCS

1. Turn the suction side vale to the suction filter maintenance position.

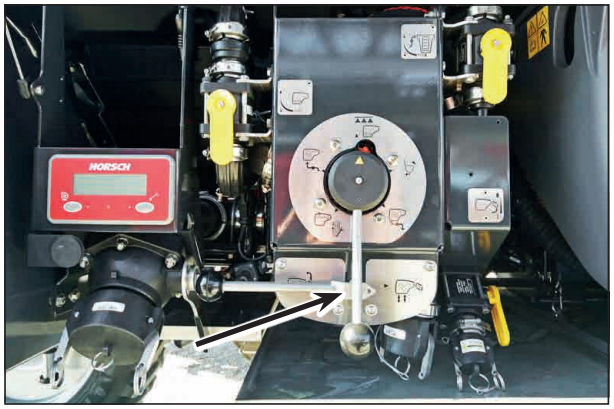

2. Drain the filter housing. Open the valve for this purpose. Collect used fluid and dispose of properly.
3. Unscrew the lid of the filter housing.
4. Remove the filter and clean/change it. Collect the deposits in a suitable tank and dispose of properly.
5. Insert the cleaned/new filter again and close the filter housing with the lid. Close the lock valve again.
6. Turn the suction side valve to the desired position.

⚠ NOTE

Clean the thread of the filter housing if soiled.

Cleaning the centrifugal pump suction filter of water systems Basic Pro and CCS Pro

1. Actuate the Filter cleaning function on the external control terminal. A note appears on the terminal that the filter can now be cleaned/replaced. Confirm the message with “ENTER”.
2. Drain the filter housing. Open the valve for this purpose. Collect used fluid and dispose of properly.
3. Unscrew the lid of the filter housing.
4. Remove the filter and clean/change it. Collect the deposits in a suitable tank and dispose of properly.
5. Insert the cleaned/new filter again and close the filter housing with the lid. Close the lock valve again.
6. Deactivate the Filter cleaning function on the external control terminal.

⚠ NOTE

Clean the thread of the filter housing if soiled.

The suction filter of the cleaning pump is located to the right of the illuviation valve.

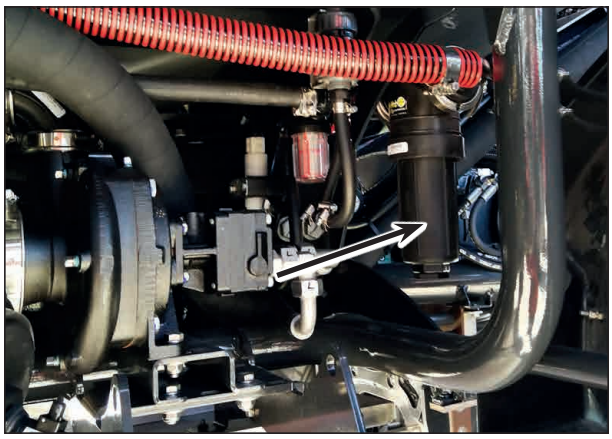

Cleaning pump suction filter

Cleaning the cleaning pump suction filter

1. Drain the fresh water tank.
2. Unscrew the lid of the filter housing.
3. Remove the filter and clean/change it. Collect the deposits in a suitable tank and dispose of properly.
4. Insert the cleaned/new filter again and close the filter housing with the lid.

CCS - Continuous inside cleaning (Continuous Cleaning System)

Continuous inside cleaning is a quick cleaning process of the crop protection sprayer without leaving the cabin.
Continuous inside cleaning is controlled from the driver's cabin.

Mode of operation: Principle of positive displacement instead of principle of dilution.

The additional piston diaphragm pump feeds clear water through the internal cleaning nozzles into the spraying mixture container. The spraying pump sucks in this water and uses it to force the chemical residue through the nozzles out of the pipeline system.
This means quick, thorough cleaning with optimised water consumption.

NOTE

The initially placed residual quantity is undiluted (up to 40 l [10 gal]). Place the residual quantity on an untreated surface!

- CCS cleaning is automatically included in the cleaning program.
- CCS cleaning can be closed manually after thorough cleaning or it ends automatically when the fresh water tank contains no more water.

Start of CCS cleaning, see chapter *Cleaning the sprayer with drained tank*.

NOTE

- The duration of the *Continuous inside cleaning* process depends on how heavily the crop protection sprayer is soiled with the crop protection agents used.
- Operate the CCS-function until only fresh water runs out of the nozzles.
- Follow the manufacturer instructions of the crop protection agents.

Cleaning with drained spraying mixture container

NOTE

The initially placed residual quantity is undiluted. Therefore, place the residual quantity on an untreated surface!
Clean the spraying mixture container after use!

Main cleaning on machines of the CCS variant:

1. Empty the spraying mixture container completely.
2. The fresh water tank must be filled with at least 300 litres [79 gal] of water.
3. Set the ball valve on the suction side to spraying mixture container.
4. Set the ball valve on the pressure side to circulation/spraying.
5. Call up the cleaning menu on the terminal.
6. Select the *Continuous inside cleaning* function in the submenu.
7. The border and edge nozzles can be cleaned as well, if necessary.
8. Start the program.

➢ Approx. 25 litres [6 gal] of fresh water is pumped into the spraying mixture container via internal cleaning.

➢ The message appears on the terminal prompting to spray the residual quantity on an untreated residual area.

➢ CCS cleaning starts.

9. CCS cleaning can be closed manually after thorough cleaning or it ends automatically when the fresh water tank and spraying mixture container contain no more water and the folding boom pressure is 0 bar [0 psi].

NOTE

In case of multiple nozzle bodies all existing nozzles must be cleaned. There is danger of deposits if this instruction is not followed!

Washing program for machines of the Basic and CCS variants:

1. Fill the fresh water tank with approx. 100 l [26 gal] of water.
2. Set the ball valve on the suction side to fresh water tank.
3. Activate the pump.
4. Using the ball valve of the pressure side, direct filling, agitator, inside/outside cleaning, illuviation valve and folding boom can each be cleaned with fresh water.
5. When cleaning the illuviation valve, turn the switch-over ball valve to sucking-off.
6. Switch on the canister flushing nozzle and operate the canister flusher, using a suitable container, until only clear water runs out.
7. Switch on the closed circuit flushing until only clear water runs out.
8. Switch on the shock nozzle for approx. 10 sec. (only for illuviation valve from stainless steel).
9. Switch on the washing gun and spray into the tank until clear water runs out.
10. Switch off the pump after cleaning.
11. Set the ball valve on the pressure side to circulation/spraying.
12. Set the ball valve on the suction side to spraying mixture container.
13. Spray the residual quantity on an untreated residual area.
14. Activate the “Air Valve” function in order to clean the folding boom with air (optional).
15. Repeat steps 1-14 for a second time (if necessary, a third time) (dilution principle).
16. Cleaning suction and pressure filters.

NOTE

In case of multiple nozzle bodies all existing nozzles must be cleaned. There is danger of deposits if this instruction is not followed!

Washing program for machines of the Basic Pro and CCS Pro variants:

1. Fill the spraying mixture container with approx. 100 l [26 gal] of water.
2. Call up the cleaning menu on the terminal.
3. Select the *Washing program* function in the submenu.
4. Start the program.
5. Activate cleaning of the illuviation valve.
6. Set the switch-over ball valve on the illuviation valve to sucking-off.
7. Switch on the canister flushing nozzle and operate the canister flusher, using a suitable container, until only clear water runs out.
8. Switch on the rinsing nozzles until only clear water runs out.
9. Switch on the shock nozzle for approx. 10 sec.
10. Switch on the spray gun and spray into the tank until only clear water runs out.
11. Switch off the illuviation valve.
12. Stop cleaning after the desired time.
13. Switch on circulation.
14. Spray the residual quantity on an untreated residual area.
15. Activate the *Air Valve* function, in order to clean the folding boom with air (optional).
16. Repeat steps 1-15 for a second time (if necessary, a third time) (dilution principle).
17. Cleaning suction and pressure filters.

Cleaning with filled spraying mixture container

NOTE

The initially placed residual quantity is undiluted. Therefore, place the residual quantity on an untreated surface!
Clean the suction fittings and spraying line in case of weather-dependent interruptions of the spraying operation!

- Perform cleaning in the field by using water from the fresh water tank.
- Refer to the chapter *Technical residual quantities* for the travel distance required to spray this undiluted residual quantity.

Procedure for machines of the Basic and CCS variants

1. Switch off the nozzles.
2. Set the ball valve on the suction side to fresh water tank.
3. Set the ball valve on the pressure side to folding boom.
4. Switch on the circulation on the terminal.
5. Drive the required travel distance with the nozzles switched on (on an untreated residual area).
6. Activate the *Air Valve* function, in order to clean the folding boom with air (optional).
7. Set the ball valve on the suction side to spraying mixture container.

NOTE

In case of multiple nozzle bodies all existing nozzles must be cleaned. There is danger of deposits if this instruction is not followed!

Procedure for machines of the Basic and CCS variants

1. Switch off the nozzles.
2. Call up the cleaning menu on the terminal.
3. Select the *Folding boom cleaning* function in the submenu.
4. Start the program.
5. A message on the terminal indicates that the required travel distance can be travelled with the nozzles activated (on untreated area).
6. The cleaning process ends automatically.
7. Activate the *Air Valve* function, in order to clean the folding boom with air (optional).

Folding boom cleaning with Air Valve (optional)

This function blows out the technical residual quantities left in the folding boom lines after the cleaning process.

This reduces deposits in nozzles and folding boom lines.

Blow-out process of water systems Basic and CCS

1. Air reservoir of the machine must be filled.
2. Switch off all spraying functions. Switch off pressure agitator, internal cleaning, injector and spraying pump as well.
3. For machines of the Basic and CCS variant turn the pressure side valve to folding boom.
4. Call up the *Cleaning menu* on the terminal.
5. Select the *Air Valve* function in the submenu.
6. Start the program.
7. The blow-out process ends automatically.
8. Repeat the function if necessary, until no more fluid escapes from the nozzles.

Blow-out process of water systems Basic Pro and CCS Pro

1. Air reservoir of the machine must be filled.
2. Switch off all spraying functions. Switch off pressure agitator, internal cleaning, injector and spraying pump as well.
3. Call up the *Cleaning menu* on the terminal.
4. Select the *Air Valve* function in the submenu.
5. Start the program.
6. The blow-out process ends automatically.
7. Repeat the function if necessary, until no more fluid escapes from the nozzles.

NOTE

Depending on the spraying agent, the diaphragms may get stuck together. We therefore recommend to first *cleaning the folding boom*. Refer to the section *Cleaning with filled spraying mixture container*.

Cleaning the spraying mixture container (only for machines of the CCS and CCS Pro variant)

The function pumps fresh water into the spraying mixture container for internal cleaning to prevent drying of the spraying mixture.
The function is enabled from a travel speed of 3 km/h and runs in the background of the entire machine functions.
In addition, the filling level of the spraying mixture container must lie below the internal cleaning nozzles and the inside wings must be unfolded.

1. Call up the cleaning menu on the terminal.
2. Select the *Clean spraying mixture container* function in the submenu.
3. Set the time of the interval.
4. Set the time per cleaning process.
5. Start cleaning.
6. On CCS machines, this cleaning is to be started only manually without time interval.

Outside cleaning (optional)

With outside cleaning, undesired contamination is removed and the unintentional dripping / draining of adhering crop protection agents is prevented.

⚠ NOTE

- ➢ Wear personal protective outfit during outside cleaning. Observe the regulations and notes of the crop protection agent manufacturers!
- ➢ Cleaning water must not enter surface water or the sewage system.
- ➢ Perform cleaning therefore on an unpaved and green area.

Outside cleaning is required:

- if the crop protection sprayer is soiled with spraying mixture.
- when changing the crop protection agent.
- before winter storage.
- before care / maintenance of the machine.

1. Switch off all spraying functions.
2. Turn the switch-over ball valve to outside cleaning.
3. Turn the suction valve to fresh water.
4. Activate pump on the external control terminal Mini.
5. Pull the pressure hose off the reel and clean the machine with the washing gun.
6. Relieve the residual pressure after finishing cleaning. Wind up the pressure hose again on the reel and place the washing gun on the bracket.
7. Deactivate outside cleaning again on the external control terminal.
8. Turn the switch-over ball valve behind the illuviation valve again to internal cleaning.

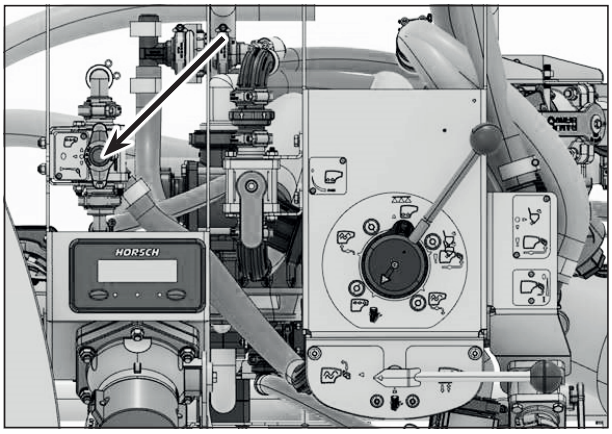

Switch-over ball valve between internal and outside cleaning

Care and maintenance

⚠ WARNING

Danger of crushing, shearing, cutting, cutting off, being caught, winding up, being pulled in and impact caused by

- **accidental lowering of lifted, unsecured machine parts.**
- **accidental starting and rolling of the machine.**

Secure both tractor and crop protection sprayer against accidental starting and unintended rolling before you start care, service or maintenance work on the machine.

Before starting work under the parallelogram of the folded folding boom, check the interlocking of the parallelogram.

⚠ WARNING

Danger of crushing, shearing, cutting, cutting off, being caught, winding up, being pulled in and impact caused by unprotected danger spots!

- Reattach all protective features that were removed for the purpose of care, service and maintenance work on the machine.
- Replace defective protective features with new ones. Use only HORSCH original parts.

⚠ DANGER

- Observe all safety notes when carrying out care, service and maintenance work!
- Maintenance and/or repair work under raised, moveable machine parts must only be carried out, after these parts have been positively secured against accidental lowering with appropriate means.

⚠ CAUTION

Contamination with crop protection agents.

- Perform all maintenance work on the crop protection sprayer only after cleaning it.

⚠ NOTE

- Regular and proper maintenance will keep the crop protection sprayer for a long time in an operable state and prevents premature wear.

Your machine has been designed and built to offer maximum performance, economy and operator friendliness under a vast variety of operating conditions.

Before delivery the machine was inspected at the factory and by your dealer to make sure that it is in optimal condition. For trouble-free operation it is very important to carry out the necessary work for care and maintenance at the recommended intervals.

- Ensure that regular tests and inspections are always carried out to schedule as specified in the operating instructions.
- For service and maintenance work park the machine on level and solid ground, secure it against rolling away.
- Use only spare parts approved by HORSCH.
- Use only spare hoses approved by HORSCH and always use hose clamps made of stainless steel for assembly.
- When performing care and maintenance work pay attention to environmental protection measures.
- Strictly comply with the statutory regulations for the waste disposal of operating materials, such as oils and greases. These statutory regulations also apply to parts coming into contact with such operating materials.

- Initiate protective measures (e.g. cover or even disassemble lines at particularly critical points)
  - when welding, drilling or grinding
  - when working with abrasive cutting wheels in the vicinity of plastic hoses and electric lines.
- Thoroughly clean the crop protection sprayer before each repair or maintenance, especially the parts contaminated by the spraying mixture.
- Carry out repairs only on machines shut down and secured against restarting.
- Switch off the main battery switch with all care and maintenance work.

  This applies in particular to welding work on the machine. The ground connection must be as close as possible to the welding point.
- Screw connections loosened for the purpose of care and maintenance work must be retighten after work is completed.

Appropriate expert knowledge is the prerequisite for the performance of tests and maintenance work. This expert knowledge cannot be obtained from these operating instructions!

The following is generally prohibited:

- drilling on the undercarriage
- enlarging existing boreholes on the vehicle frame
- welding on load-bearing parts

Conversions affect specifications in the operating instructions.

NOTE

Before each commissioning

- Check hoses, pipes and connecting pieces for apparent faults or leaking connections.
- Remedy chafed sections on hoses and pipes.
- Immediately replace worn or damaged hoses and pipes.
- Seal leaking connections immediately.

Maintenance intervals

The maintenance intervals are determined by many different factors.
For example, the different operating conditions, weather impact, travel and working speeds, dust accumulation and type of soil, crop protection agents and carbonyl diamide agents used, etc. affect the maintenance intervals. The quality of the lubricants and cleaning agents also affects the time to the next care activities.

The specified maintenance intervals therefore only serve as a reference.
In case of deviations from normal operating conditions the intervals must be adapted accordingly.

Regular maintenance is the basis for a fully operable machine. Properly serviced machines reduce the risk of failing and ensure economical use and operation of the machines.

Lubricating the machine

The machine should be lubricated at regular intervals and after each cleaning action.
This ensures operability and reduces repair costs and downtimes.

⚠ CAUTION

Hygiene
Lubricants and mineral oil products are not harmful to health as long as they are used as instructed.
Prolonged skin contact or the inhalation of vapours should, however, be avoided.

Handling lubricants
Wear gloves or use protective creams to protect against direct contact with oils.
Thoroughly clean any oil off your skin by washing with warm water and soap.

Lubricate / grease the machine at the indicated intervals. Carefully clean lubrication points and grease gun before lubricating, so that no dirt is pressed into the bearings. Press the used up grease completely out of the bearings and replace it with fresh grease!

Lubricants

⚠ NOTE

- A lithium-saponified multi-purpose grease with EP additives must be used for lubrication tasks.
- Use only cleaned hydraulic oil that complies with the demanded cleanliness class:
  - Cleanliness class 9 as per NAS 1638
  - Cleanliness class 18/16/13 as per ISO 4406

Brand	Lubricant designation **Normal** operating conditions
ARAL	Aralub HL 2
FINA	FINA Marson L2
ESSO	ESSO Beacon 2
SHELL	SHELL Ratinax A

Brand	Lubricant designation **Extreme** operating conditions
ARAL	Aralub HLP 2
FINA	FINA Marson EPL-2
ESSO	ESSO Beacon EP 2
SHELL	Tetinax AM

Brake shaft bearings, outer and inner

⚠ CAUTION

No grease or oil must enter into the brake. Use only lithium-saponified grease with a dropping point higher than 190 °C [374 °F].

Faults

⚠ WARNING

Danger of crushing, shearing, cutting, cutting off, being caught, winding up, being pulled in and impact caused by

- accidental lowering of lifted, unsecured machine parts.
- accidental starting and rolling of the machine.

Secure the machine against unintended starting and accidental rolling away, before faults on the machine are rectified. Wait until the machine has come to a halt before entering the danger zone.

Fault	Cause	Remedy
The pump does not prime.	Blockage in the suction side (suction hose) / fitting	Remove the blockage.
	Pump draws in air.	• Check the hose connection on the suction hose for leakage. • Drain valve on suction filter open. • Suction filter housing leaking.
No pumping power.	Jammed or damaged ball valves.	Replace the ball valves.
	Pump draws in air, noticeable air bubbles in the spraying mixture container.	Check the hose connections on the suction hose for leakage.
Wobbling of the spraying cone	Irregular fluid flow from the pump.	Check valves on suction and pressure side, replace if necessary.
The required and entered application quantity is not reached.	High travel speed; low pump drive speed	Reduce the travel speed and increase the pump drive speed until both the error message and the audible warning disappear.
	Clogged nozzles / nozzle filter or suction filter / pressure filter	Clean nozzles / nozzle filters with compressed air. For this purpose unscrew the nozzles and blow them out with a compressed air gun (on the folding boom middle section). In case of frequent appearance check the suction filter / pressure filter.
The permitted spraying pressure range of the installed spraying nozzles is not complied with.	Changed specified travel speed which affects the spraying pressure.	Change the travel speed to reach the travel speed range again that has been determined for spraying operation.
The spraying pressure does not maintain the nominal value.	Spraying pressure too low	• Clean the filter. • Increase the engine speed.
Main cleaning process stops at internal cleaning.	Manual switch-over ball valve internal/outside cleaning set to outside cleaning.	Switch valve to internal cleaning.

Attachment maintenance overview

Maintenance location	Work instructions	Interval
After 10 operating hours		
Retighten all screw and plug-in connections as well as the hydraulic connections.	Even firmly tightened screw connections can come loose (e.g. because of material settlement or paint residues between the screw elements). This may lead to loose screw connections and leaking hydraulic connections.	Once after 10 h
Before the season		
Complete machine	Read the operating instructions carefully as a refresher.	
	Check all screw connections for firm seating and retighten as necessary	
	Check condition and function of all protective features and replace, if necessary	
	Check electrical lines for damage and replace, if necessary.	
	Check the function and leak tightness of the hydraulic system and water system.	
In use		
Hydraulics		
⚠ WARNING	Lock all hydraulically operated parts before any work on the hydraulic system. Depressurise the hydraulics! Empty the pressure accumulators.	
	Allow hydraulic oil and hydraulic components heated during operation to cool down before any work on the hydraulic system.	
	Observe the notes on hydraulics in the chapter *Safety and Responsibility*.	
Hydraulic system and components	Check all hydraulic components and hoses for function, leak tightness, fastening and chafing	50 h
Hydraulic hoses	Check the hydraulic hoses regularly for damage (cracks, chafing, etc.).	
	Replace damaged and faulty hoses immediately.	
	Hydraulic hoses must be replaced after 6 years. Pay attention to the manufacturing date on the crimp sleeve (year/month) and the hose (quarter/year):  Crimp sleeve Hose	
	Depending on the conditions of use (e.g. weather influences) or in case of higher strains on the machine the hoses may need to be replaced earlier.	
	Have the hydraulic system checked by an expert at least once every year.	
	In addition, follow the country specific regulations and directives.	
Electrics		
Electric lines	Check for damage	50 h
Lighting	Check function	daily

Maintenance location	Work instructions	Interval
Water system		
Piston diaphragm pump	Cleaning, flushing	daily
Spraying mixture container		
Pressure filter		
Pressure filter PowerFill filling pump (optional)		
Suction filter		
Dome screen		
Spraying nozzles		
Centrifugal pump		
Piston diaphragm pump	check for leaks	daily
Centrifugal pump	check for leaks	daily
Hose assembly	check for leaks	50 h
Centrifugal pump	Check the oil level	yearly
Piston diaphragm pump	Check the oil level	yearly
Spraying nozzles	Replace worn nozzles	yearly
Flow meter	Calibrating the flow meter	yearly
High pressure cleaner (optional)	Oil change	yearly
Folding boom		
Complete machine	Check for apparent faults	daily
Folding boom / parallelogram	Visual inspection of folding joints for zero clearance, apparent faults and wear. In case of play or lose components, have faults corrected by HORSCH Service staff.	50 h
Folding boom	Check setting	yearly
Safety installations		
Lighting and warning boards	Check condition and function	daily
Warning and safety stickers	Check that they are in place and legible	50 h
At the end of the season		
Complete machine	Perform care and cleaning work; do not spray plastic parts with oil or similar	
	Spray the piston rods of the hydraulic cylinder with a suitable corrosion protection agent	
	Check all screw and plug-and-socket-connections for firm seating (see torque table)	
	Check frame and connecting parts for condition and firm seating	
	Check electrical lines for damage and replace, if necessary.	

NOTES:
- The *daily* maintenance interval designates maintenance on each working day before working with the machine
- Follow additional maintenance notes in the respective chapters.

Lubrication points (lubricating grease: DIN 51825 KP/2K-40) - Lubricate the following, number of lubrication points in brackets		
Height adjustment	• Hydraulic height adjustment lubricate (2 per suspension)	50 h or weekly
Sliding axle	• Mechanical track width adjustment lubricate (depending on the suspension, apply with brush to all sides of the sliding tube when the sliding axle is extended)	when adjusted
	• hydraulic track width adjustment lubricate (4 per suspension)	50 h or weekly
Suspension bridge	lubricate (2 per suspension)	50 h or weekly
Suspension sled	lubricate (2 per suspension)	10 h or daily
Hydropneumatic suspension (only Leeb VN)	lubricate (2 per suspension)	50 h or weekly
Steering	lubricate (1 per suspension)	50 h or weekly
Pendulum frame / central frame connection	lubricate (5)	50 h
Central frame	lubricate (2)	50 h
Inside wing / middle frame connection	lubricate (2)	50 h
Parallelogram to central frame	lubricate (6)	50 h
Lubrication bar	lubricate (4)	50 h
Parallelogram to machine	lubricate (2)	
Central frame / middle frame tractor link arm	lubricate (2)	50 h
Parallelogram interlock cylinder	lubricate (2)	50 h
Outside wing / collision protection	lubricate (2 each on both sides)	50 h
Inside wing / outside wing	lubricate (2 each on both sides)	50 h
Middle section / inside wing	lubricate (4 each on both sides)	50 h

Overview of basic vehicle lubrication points

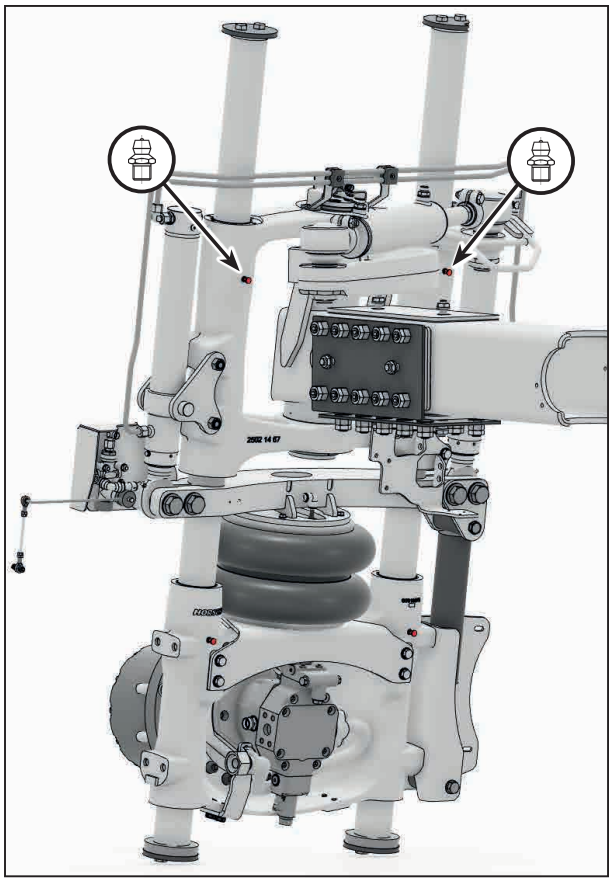

Suspension bridge

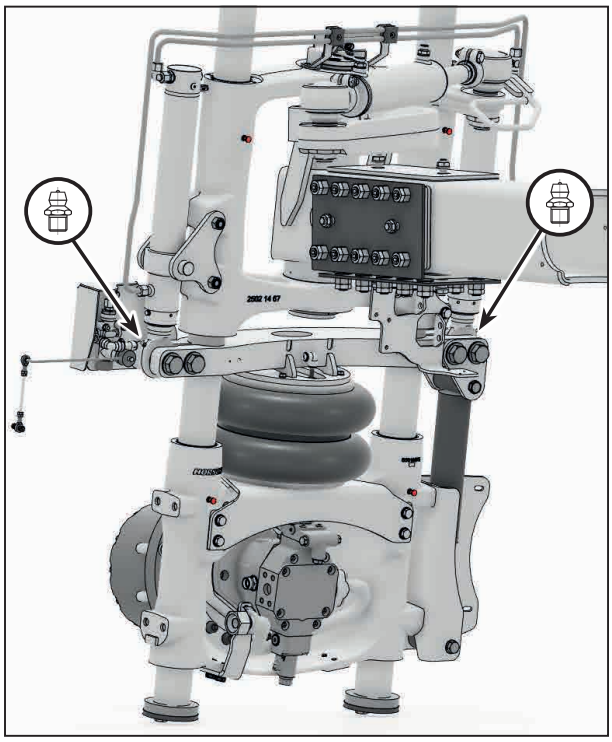

Suspension bridge hydraulic height adjustment

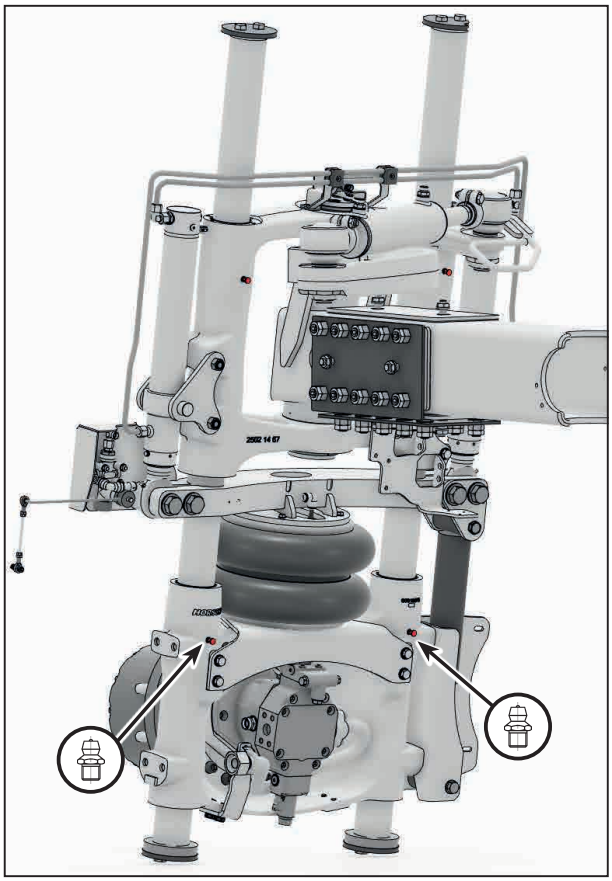

Suspension sled

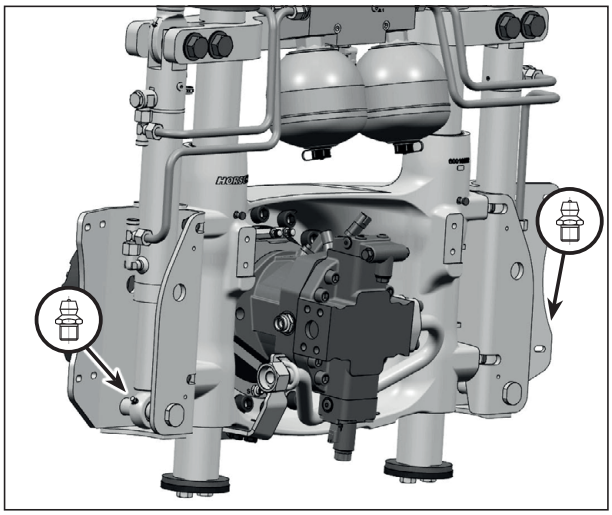

Hydropneumatic suspension (only Leeb VN)

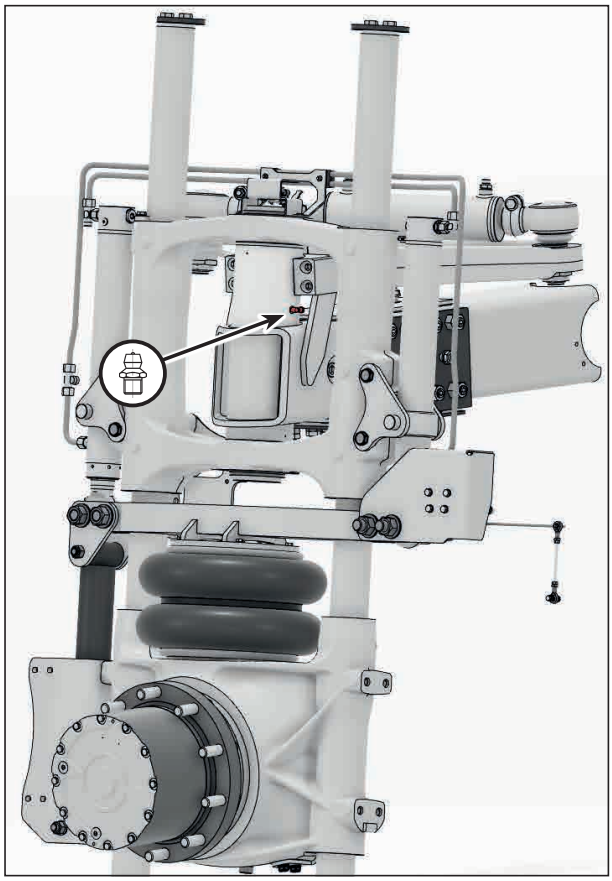

Steering

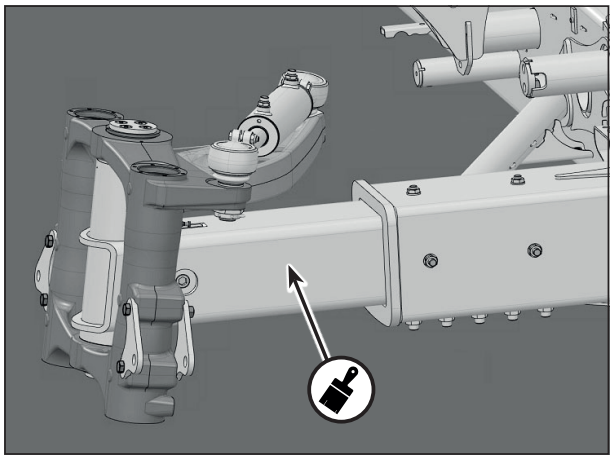

Mechanical track width adjustment

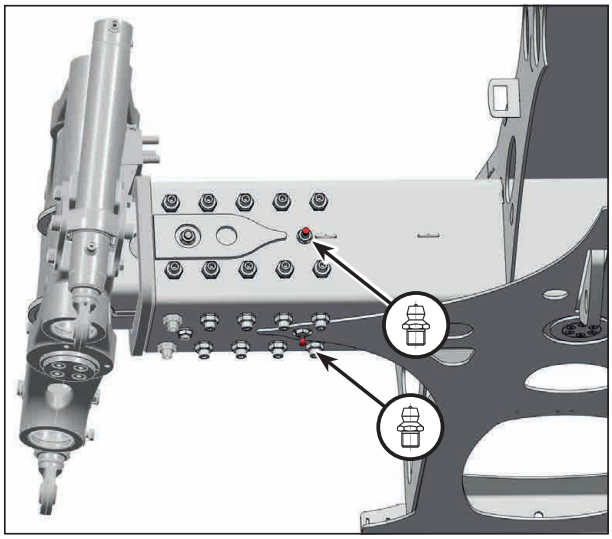

Hydraulic track width adjustment rear, underside

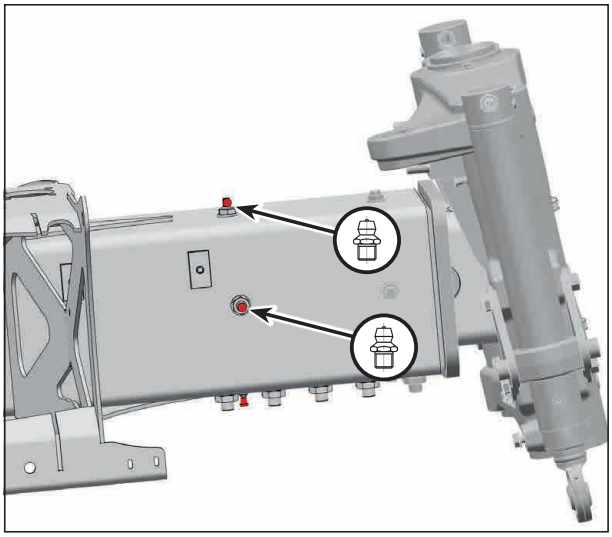

Hydraulic track width adjustment front, top side

Folding boom 5-piece double folding

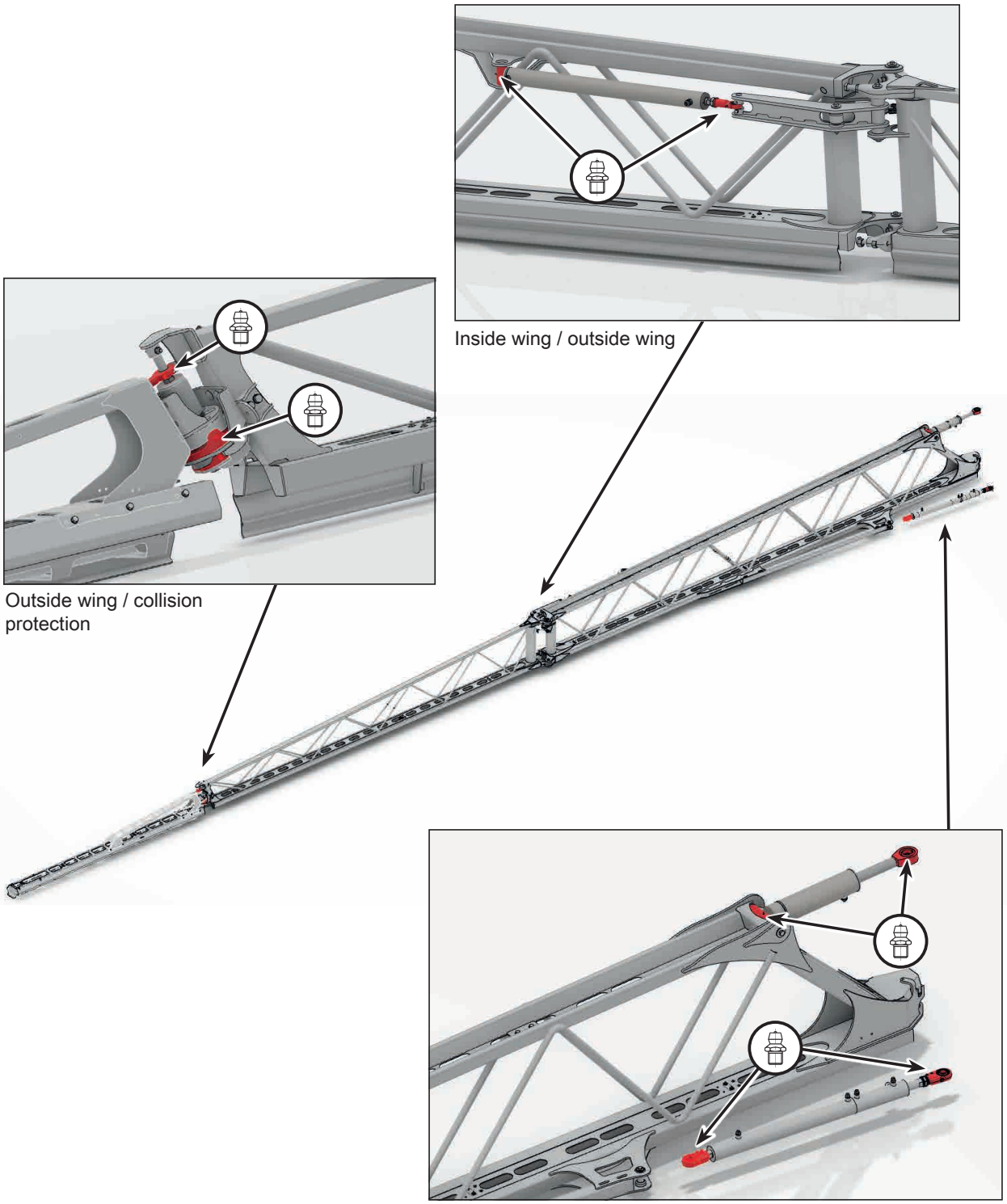

Overview of lubrication points middle section

NOTE

Certain lubrication points can only be reached when the folding boom is unfolded or the parallelogram is raised or lowered.

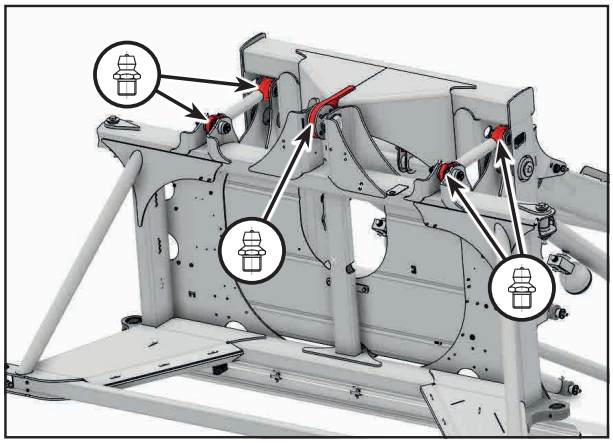

Pendulum frame / central frame connection

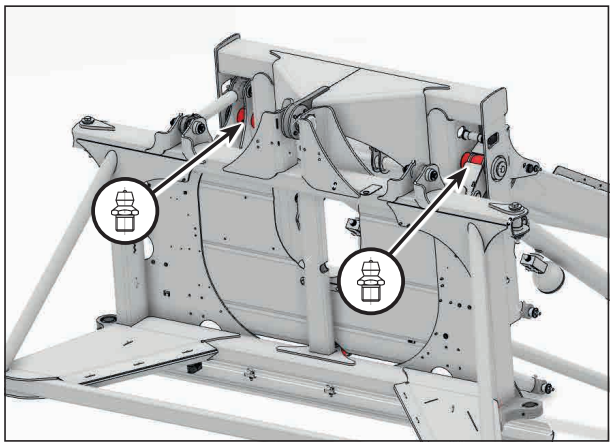

Central frame

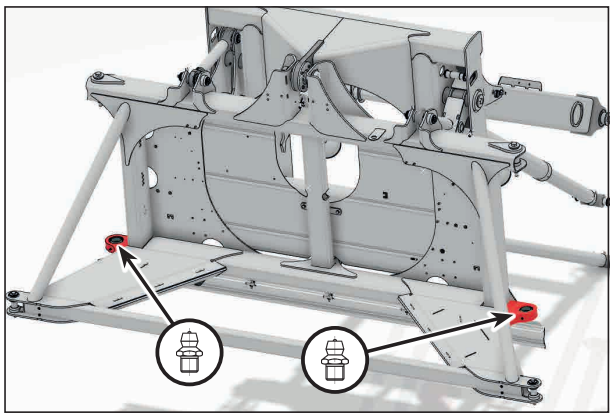

Inside wing / middle frame connection

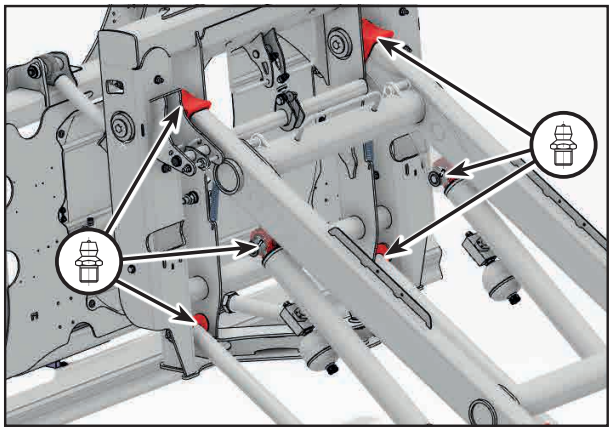

Parallelogram to central frame connection

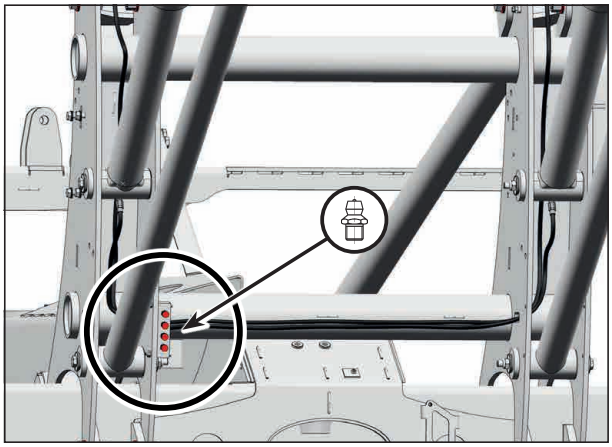

Lubrication bar parallelogram connection to machine

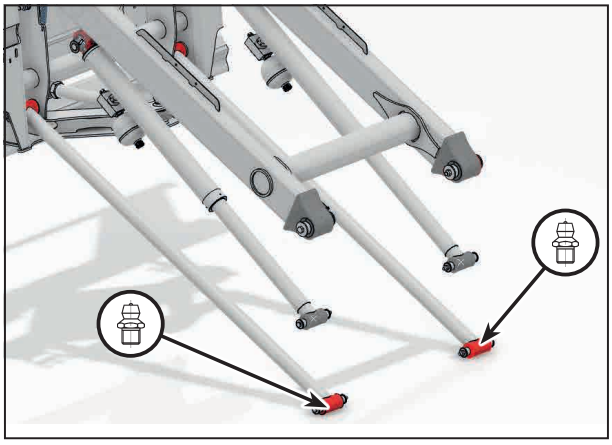

Parallelogram to machine connection

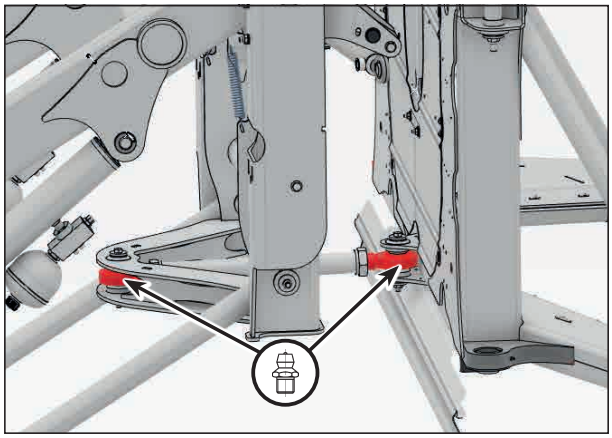

Central frame / middle frame tractor link arm

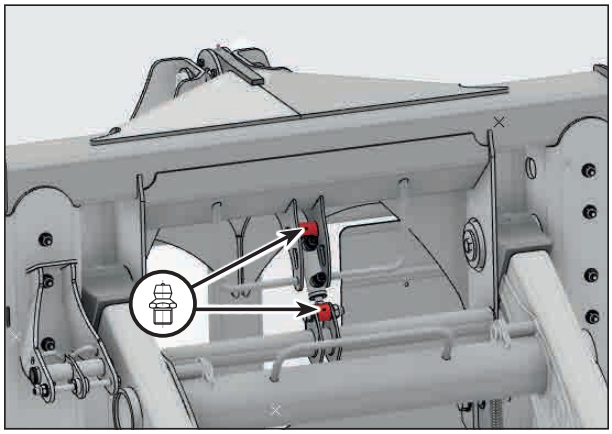

Parallelogram lock

Calibrating the flow meter

The flow meter is calibrated by using the tank method. A major amount of water is thereby discharged from the spraying mixture container over a certain period of time.

With the help of simulated travel speed and the spraying duration the distance the machine will travel can be calculated.

Distance = travel speed x spraying duration

Multiplied with the working width gives you the area that would be processed when working with the simulated travel speed and spraying time.

Processed area = distance x working width

You can then calculate the required amount of spraying mixture and compare it with the amount actually used.

Required placing quantity =
processed area x placing quantity

The correction factor for the set pulses/100 l is thereby determined. This is the required quantity, divided by the quantity actually placed.

$$\text{Correction factor} = \frac{\text{required quantity}}{\text{placed quantity}}$$

- ➢ The value is finally corrected under parameter *Main flow pulses* and a new calibration is made by using the new values.

  For the crop protection sprayer the standard value is 2,100 pulses/100 l.

Example:

The numerical values in the example were randomly chosen and may differ from practice.

- Machine with 36 m working width.
- Setting on terminal: 2,100 pulses / 100 l

➢ Set 200 l / ha as placing quantity.

➢ Set 10 km/h as simulated travel speed.

➢ Note the filling level spraying mixture container.

➢ Read the value under parameter *Main flow pulses* (pulses/100 l) on the terminal and write it down.

➢ Switch on the crop protection sprayer and run it for 15 minutes.

The distance thereby is:

10 km/h x 0.25 h = 2,500 m

Multiplying this with the working width gives you a processed area of:

2,500 m x 36 m = 90,000 m^2 = 9 ha

The product of this area and the set placing quantity results in the required amount of spraying mixture:

9 ha x 200 l/ha = 1,800 l

This value is now set into relation to the quantity actually placed. The actually placed quantity is the difference in filling level spraying mixture container before and after calibration.

Here the quantity actually placed is: 1,850 l

The correction factor in this case is:

$$\text{Correction factor} = \frac{1{,}800\ \text{l}}{1{,}850\ \text{l}} = 0.973$$

The placed quantity is too high, the value under parameter 457 therefore needs to be corrected.

New value (pulses/100 l):

2,100 x 0.973 = 2,043

Calibrating the flow meter

The flow meter is calibrated by using the tank method. A major amount of water is thereby discharged from the spraying mixture container over a certain period of time.

With the help of simulated travel speed and the spraying duration the distance the machine will travel can be calculated.

Distance = travel speed x spraying duration

Multiplied with the working width gives you the area that would be processed when working with the simulated travel speed and spraying time.

Processed area = distance x working width

You can then calculate the required amount of spraying mixture and compare it with the amount actually used.

Required placing quantity =
processed area x placing quantity

The correction factor for the set pulses/26 gal lqd is thereby determined. This is the required quantity, divided by the quantity actually placed.

$$\text{Correction factor} = \frac{\text{required quantity}}{\text{placed quantity}}$$

- ➢ The value is finally corrected under parameter *Main flow pulses*, and a new calibration is made by using the new values.

  For the crop protection sprayer the standard value is 2,100 pulses/26 gal lqd.

Example:

The numerical values in the example were randomly chosen and may differ from practice.

- Machine with 120 ft working width.
- Setting on terminal: 2,100 pulses/26 gal lqd

➢ Set 21 gal lqd/ac as placing quantity.

➢ Set 6.2 mph as simulated travel speed.

➢ Note the filling level spraying mixture container.

➢ Read the value under parameter *Pulses main flow* (pulses/26 gal lqd) in the terminal and write it down.

➢ Switch on the crop protection sprayer and run it for 15 minutes.

The distance thereby is:

6.2 mph x 0.25 h = 1.55 mi = approx. 8200 ft

Multiplying this with the working width gives you a processed area of:

8200 ft x 120 ft = 984.000 ft² = 22.5 ac

The product of this area and the set placing quantity results in the required amount of spraying mixture:

22.5 ac x 21 gal lqd/ac = 473 gal lqd

This value is now set into relation to the quantity actually placed. The actually placed quantity is the difference in filling level spraying mixture container before and after calibration.

Here the quantity actually placed is: 488 gal lqd

The correction factor in this case is:

$$\text{Correction factor} = \frac{473 \text{ gal lqd}}{488 \text{ gal lqd}} = 0.97$$

The placed quantity is too high, the value under parameter 457 therefore needs to be corrected.

New value (pulses/26 gal lqd):

2,100 x 0.973 = 2,043

Inspection of the crop protection sprayer

Inspection of the crop protection sprayer must only be carried out by authorized agencies. The national legal inspection intervals must be complied with!

Checking the pump capacity

1. Connect the test hose on the pressure output (2″ Camloc coupling required).

Pressure output (figure varies depending on machine type)

2. Open the valve.
3. Adjust the pressure control to 8 bar.
4. Switch on the circulation on the terminal. The pump shall run at full capacity at this.
5. Deactivate circulation on the terminal again after the test has been completed.
6. Close the valve.
7. Uncouple the test hose on the pressure output.
8. Close the pressure output with the cap.

Flow meter test

➢ To test the flow meter, the test adapter set (order number 36960072) can be ordered from HORSCH.

1. Disconnect the hose union to the flow meter on the middle section.

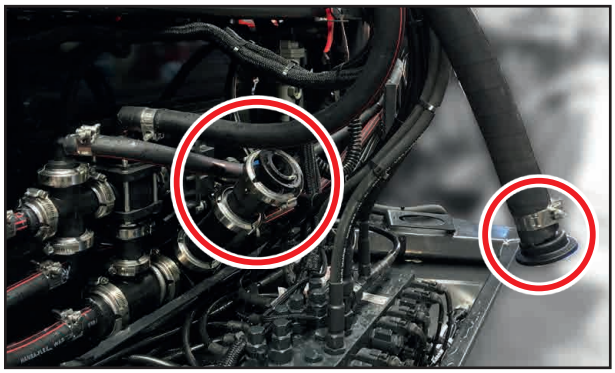

1. Connect the first hose of the test adapter set to the flow meter. Connect the second hose of the test adapter set to the dismantled hose on the flow meter.

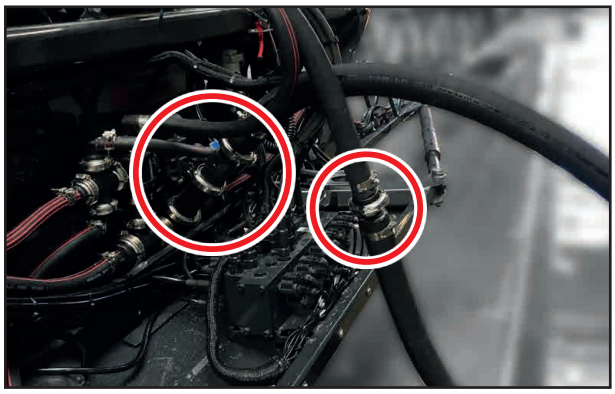

2. Connect the two other ends of the hoses of the test adapter set to the test device.
3. To perform the test, circulation must be activated on the terminal.
4. Deactivate circulation on the terminal again after the test has been completed.
5. Uncouple both hoses of the test adapter set on the test device and on the sprayer.
6. Reconnect the hose of the flow meter on the middle section of the machine. Ensure a correct and watertight connection!

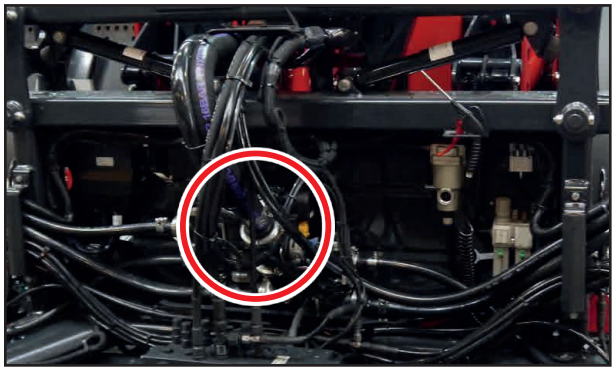

Maintenance overview chassis

Maintenance location	Work instructions	Interval
After 10 operating hours		
Retighten all screw and plug-in connections as well as the hydraulic connections.	Even firmly tightened screw connections can come loose (e.g. because of material settlement or paint residues between the screw elements). This may lead to loose screw connections and leaking hydraulic connections.	Once
Retighten all wheel nuts M22 x 1.5 - 510 Nm [375 ft lb]	➢ initially after 10 hours or 50 km ➢ again after 10 hours or 50 km ➢ then retighten daily until the screws have settled and further tightening is no longer possible. ➢ then always before the start of the season and every 50 operating hours during use.	
Cabin filter system		
Before the season		
Complete machine	Read the operating instructions carefully as a refresher.	
	Check all screw connections for firm seating and retighten as necessary	
	Check condition and function of all protective features and replace, if necessary	
	Check electrical lines for damage and replace, if necessary.	
	Check the function and leak tightness of the hydraulic system and water system.	
In use		
Hydraulics		
⚠ WARNING	Lock all hydraulically operated parts before any work on the hydraulic system. Depressurise the hydraulics! Empty the pressure accumulators.	
	Allow hydraulic oil and hydraulic components heated during operation to cool down before any work on the hydraulic system.	
	Observe the notes on hydraulics in the chapter *Safety and Responsibility*.	
Hydraulic system and components	Check all hydraulic components and hoses for function, leak tightness, fastening and chafing	50 h
Hydraulic hoses	Check the hydraulic hoses regularly for damage (cracks, chafing, etc.).	
	Replace damaged and faulty hoses immediately.	
	Hydraulic hoses must be replaced after 6 years. Pay attention to the manufacturing date on the crimp sleeve (year/month) and the hose (quarter/year):  Crimp sleeve Hose Depending on the conditions of use (e.g. weather influences) or in case of higher strains on the machine the hoses may need to be replaced earlier.	
	Have the hydraulic system checked by an expert at least once every year.	
	In addition, follow the country specific regulations and directives.	
Hydraulics pressure filter	Replace element	1200 h or annually

Maintenance location	Work instructions	Interval
Hydraulics suction filter	Replace element	1200 h or annually
Hydraulics spillage oil suction filter	Replace element	1200 h or annually
Hydraulics return suction filter	Replace element	1200 h or annually
Hydraulic oil tank	Oil change	1200 h or annually
Hydraulics priming pump suction filter	Replace element	1200 h or annually
Hydraulics working pump pressure filter	Replace element	1200 h or annually
Electrics		
Electric lines	Check for damage	50 h
Lighting	Check function	daily
Chassis		
Compressed air	Replace dryer cartridge	2400 or 2 years
	Drain air reservoir	daily
	Check the filter-regulator combination	daily
Engine	Check the oil level	daily
	Check oil filter	100 h
	Replace fuel prefilter inspection glass	600 h or annually
	Replace fuel prefilter	600 h or annually
	Replace fuel main prefilter	600 h or annually
	Replace oil filter	600 h or annually
	Change engine oil	600 h or annually
	Check V-ribbed belt	600 h or annually
	Replace the crankcase breather filter	1200 h or annually
	Check AdBlue vent filter and replace as needed (optional)	1200 h or annually
	Clean battery	1200 h or annually
	Check valve cover seal and adjust inlet /outlet valves	2400 or 2 years
	Replace AdBlue filter (optional)	2400 or 2 years
	Replace V-ribbed belt	3600 or 3 years
	Change coolant	3600 or 3 years

Maintenance location	Work instructions	Interval
Air filter	Check / clean preliminary filter system	600 h
	Replace element	1200 h or annually
	Replace safety element	2400 or 2 years
Cooling system, turbocharger	Check / inspect antifreeze mixture	100 h
	Check hose connections and ports for firm seating	600 h
Air conditioning system	Check air conditioning	as required
	Replace air conditioning system drier cartridge	as required
	Changing oil of air-conditioning compressor	as required
	Change refrigerant	as required
Sliding axle	Visual inspection for damages/wear	daily
	Retighten grub screws and locking nuts. mechanical: Pre-clamping 40 Nm [30 ft lb]; after-clamping 80 Nm [60 ft lb] (in addition, after 100 h following adjustment) Locking nut 180 Nm [133 ft lb] hydraulic: Pre-clamping 40 Nm [30 ft lb]; after-clamping 80 Nm [60 ft lb] Locking nut 180 Nm [133 ft lb]	After 100, 600, 1200, 2400 h etc.
Height adjustment	Visual inspection for damages/wear	daily
	Retighten all securing bolts (mechanical and hydraulic height adjustment)	After 100, 600, 1200, 1800 h etc. (in addition, after 100 h following adjustment)
	Check the distance of lifting bridge to suspension sled, readjust if necessary; (mechanical and hydraulic height adjustment) • Lower travel position: 410 ± 5 mm [16 ± 0.2 in] • High travel position: 10 ± 5 mm [0.4 ± 0.2 in]	After 100, 600, 1200, 1800 h etc. (in addition, after 100 h following adjustment)
Suspension	Leeb VL: Check all rubber or plastic parts (air springs, bottom rubber bumpers) for damage or porosity	daily
	Leeb VN: Check all rubber or plastic parts (bottom rubber bumpers) for damage or porosity	daily

Maintenance location	Work instructions	Interval
Wheel drive	Change wheel hub oil	after the first 100 h, then every 600 h
	Check rubber gaskets and suspension pins	600 h
Service brake	Check function	600 h
Cabin	Clean / replace pocket filter	every 6 months
	Activated-carbon filter category 2	every 3 months
Category 4 filtering (optional)	Activated-carbon filter	every 3 months
	Dust filter	every 6 months
	Aerosol filters	every 6 months
Windscreen washing system tank	Fill windscreen washer tank	as required
Wheels / brakes		
Undercarriage / wheels	Check for damage (cracks, etc.)	daily
	Check fastening / retighten wheel nuts - see above	see above
	Check air pressure	daily
Brake system	Check function	daily
	Check brake lines and hoses for damages, crushing points and kinks	daily
	Check for leaks	200 h
Safety installations		
Lighting and warning boards	Check condition and function	daily
Warning and safety stickers	Check that they are in place and legible	50 h
At the end of the season		
Complete machine	Perform care and cleaning work; do not spray plastic parts with oil or similar	
	Spray the piston rods of the hydraulic cylinder with a suitable corrosion protection agent	
	Check all screw and plug-and-socket-connections for firm seating (see torque table)	
	Check frame and connecting parts for condition and firm seating	
	Check electrical lines for damage and replace, if necessary.	
Brake system	Check brake lines, check adjustment	

NOTES:
- The *daily* maintenance interval designates maintenance on each working day before working with the machine
- Follow additional maintenance notes in the respective chapters.

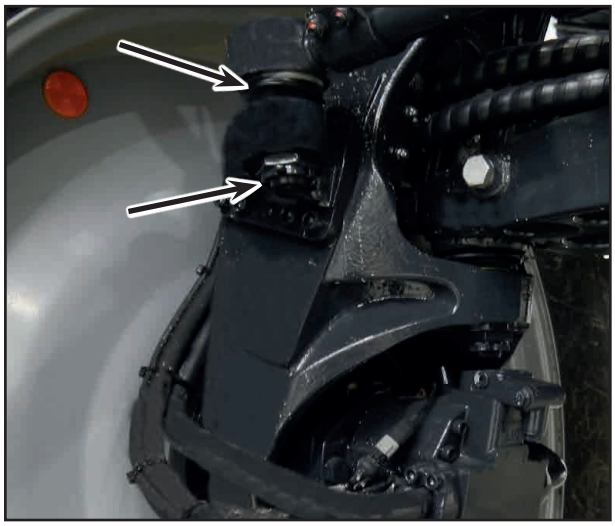

Check rubber gaskets and steering cylinder cotter pins (Figure varies depending on the machine design)

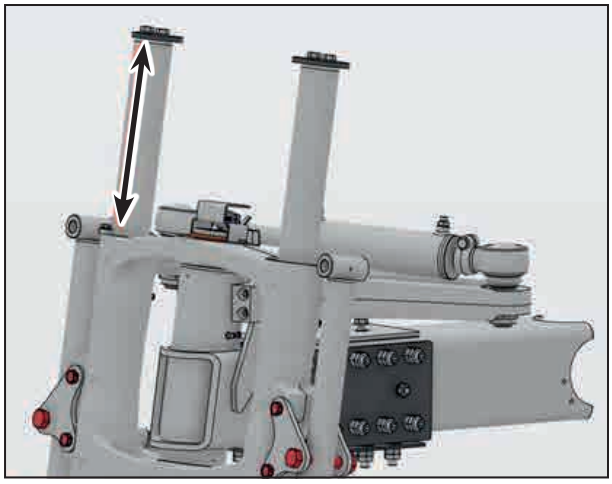

Clamping dimension of height adjustment from top edge of suspension bridge to the end covers of the guide column (410 mm) [16 in] (low travel position shown)

Fuels and lubricants

Filling points	Filling quantity*	Type ***	Change interval **
Engine (with filter)	approx. 15.2 l [4 gal]	• 5W-30 ACEA E6 • 10W-40 ACEA E9 / • API CJ-4 Low SAPs	after 600 operating hours and subsequently after 600 operating hours. (min. 1x per year)
Wheel drive • PowerGear (GFT 8130) • HighPowerGear (GFT 8144)	approx. 4 x 1.9 l [64 fl oz] approx. 4 x 2.6 l [88 fl oz]	• Min. requirements acc. to CAT TO-4 SAE 50 • Approved oils - Mobil Trans HD 50 - Mobilgear SHC XMP 220 - Spirax S4 CX 50 - FUCHS TITAN UTTO TO-4 SAE 50	after the first 100 and then 600 operating hours (at least 1x per year)
Windscreen washing system	approx. 4 l [1 gal]		fill up to max. level.
Hydraulic system oil change quantity with max. filling	approx. 100 l [26 gal]	Hydraulic oil HVLP-D46 Cleanliness class ISO 4406 18/16/13	after 1200 operating hours and subsequently after 1200 operating hours. (min. 1x per year)
Fuel tank	approx. 450 l [118 gal]	Diesel fuel **** DIN EN 590	after work and fill up as required
Carbonyl diamide tank (only with 5 / 6 / 8.300 VL and 5 / 6.300 VN)	approx. 45 l [11 gal]	Carbonyl diamide solution AdBlue ISO 22241	after work and fill up as required
Cooling system	approx. 35 l [9 gal]	Mixture of clear, soft water and coolant (MB 325.0)	replace engine coolant after 3 years
Hypro spraying pump		Hypro Barrier Fluid 0.7 L	Filling level check, refill annually if necessary
Piston diaphragm pump	between min. and max.	SAE 30	for repair

Filling points	Filling quantity *	Type ***	Change interval **
Air conditioning system	1.250 kg [2 lbs]	R 134a	as required
High pressure cleaner	approx. 0.4 l [4 fl oz]	AGIP GAMMA 30	yearly
Lubrication points, see lubrication chart	up to max.	Lithium saponified grease, NLGI class 2 (worked penetration number 265-295)	See lubrication chart; lubricate all other bearings and joints regularly with oil

* The inspection by means of dipstick or other fluid measuring facilities is decisive for the amount to be filled in

** Time limited by the value reached first

*** Approved brand designations, as far as determined. See current list of fuels and lubricants, which is available in authorized workshops in form of service information.

**** In case of a sulphur content higher than 1% in the diesel fuel, the oil change intervals must be halved. A sulphur content of 0.05% is recommended, but sufficient lubrication abilities (e.g. by additives) must be confirmed by the fuel supplier. Alternative fuels, e.g. RME, only after consultation with authorized workshops.

Maintenance of the hydraulic system

⚠ WARNING

Danger of infection caused by high pressure hydraulic oil from the hydraulic system penetrating into the body!
Danger of severe injuries!

If injured by hydraulic oil, consult a doctor immediately!

- Work on the hydraulic system must only be performed by specialist workshops!
- Always depressurize the hydraulic system before starting work in the hydraulic system!
- Use appropriate aids when checking for leaks!
- Never try to seal off leaking hydraulic hoses with your hands or fingers!
- Ensure correct connection of the hydraulic hoses.
- Check all hydraulic hoses and couplings regularly for damage and contamination.
- Have the hydraulic hoses inspected by an expert under safety related aspects at least once every year!
- Replace hydraulic hoses if damaged or excessively aged! Use only original hydraulic hoses from HORSCH!

⚠ NOTE

Make sure the hydraulics are depressurised when connecting the hose lines!

⚠ NOTE

The hydraulic cylinders must be filled again with hydraulic oil after carrying out installation work on the hydraulic system. The complete hydraulic system must subsequently be bled. This is done by selecting all hydraulic functions several times. Hydraulic cylinders must extend and retract without jerking.

- Danger zones must be blocked off during commissioning.
- When performing installation work, raised machine parts must be lowered completely, moved to a safe position or secured at the particular height by suitable means.

Even if properly stored and under permissible stress, hoses and hose connections are subject to natural ageing. This limits their shelf life and their utilization period.

Deviating from this, the utilization period can also be determined on the basis of empirical values, particularly under due consideration of the endangering potential. For hoses and hose lines made of thermoplastics other guide values may be decisive.

The utilization period of hydraulic hoses should not exceed six years, including a possible storage time of maximum two years.

Depending on the conditions of use (e.g. weather influences) or in case of higher strains on the machine the hoses may need to be replaced earlier.

- Dispose of old oil environmentally. Strictly adhere to the corresponding country-specific regulations.
- Keep hydraulic oil out of the reach of children!
- Make sure that no hydraulic oil enters into the ground or into water!
- In addition, follow the country specific regulations and directives.

⚠ NOTE

Additional specifications of the hydraulic system (circuit diagrams, etc.) can be obtained from the HORSCH service department.

Inspection criteria for hydraulic hoses

NOTE

The following inspection criteria must be observed in the interest of your own safety and to reduce environmental damages!

Replace hoses, if these fulfil at least one criterion from the following list:

- Damage to the outer layer to the ply (e.g. chafing, cuts, cracks).
- Embrittlement of the outer layer (formation of cracks in the hose material).
- Deformations, which do not correspond with the natural shape of the hose. Both in pressureless and pressurized condition or in case of bending (e.g. layer separation, formation of blisters, squeezing, buckling).
- Leakages.
- Failure to comply with installation requirements.
- The max. utilization period of 6 years has expired.

  The date of manufacture on the hydraulic hoses fitting plus 6 years is decisive. If the fitting is marked with the manufacturing date “2014”, the utilization period ends in January 2020.

NOTE

Leaking hoses / pipes and connecting pieces are frequently the result of:

- missing O-rings or seals
- damaged or poorly fitted O-rings
- brittle or deformed O-rings or seals
- foreign objects
- loose hose clamps

Assembly and disassembly of hydraulic hoses

NOTE

Use only original spare hoses from HORSCH. These spare hoses withstand the chemical, mechanical and thermal loads.

- Generally use hose clamps made of stainless steel when installing hoses.

When installing and disassembling hydraulic hoses comply with the following notes.

Ensure cleanliness!
Hydraulic hoses must be installed so that the following is ensured under any operating condition:

- no tensile loads, except by own dead weight.
- no buckling stress in case of short lengths.
- no falling below the permissible bending radii.
- avoiding external mechanical stresses on the hydraulic hoses.
- no rubbing of hoses on components or against each other through appropriate arrangement and fastening.
- if necessary, protection through protective sheathing.
- covering sharp-edged components.

- Fasten hydraulic hoses at the intended fastening points.
- Hose clamps are to be avoided at locations where natural movements and changes of the hose length may be interfered with.
- It is not permitted to cover hydraulic hoses with paint!

Storage

- Clean the machine thoroughly. Chaff and dirt will attract moisture, which causes corrosion.
- Park the machine indoors and secure it with wheel chocks against rolling away.
- Unplug the terminal and store it in a dry place.
- Protect the machine against corrosion. Use only biodegradable oils for anti-rust spraying.
- Protect the hydraulic cylinder piston rods against corrosion.

NOTE

- Do not spray the plastic and rubber parts with oil or corrosion protection agent. These parts could become brittle and break.

At the end of the season

NOTE

If a high pressure cleaner is used for cleaning, do not direct the water jet to bearings, electrics/ electronic components and sensitive cover panels. Observe also the section *Cleaning with high pressure cleaner / steam jet*.

- Clean the filter elements of suction and pressure side.
- Lubricate the machine according to the lubrication plan.
- Grease the visible threads of setscrews and similar.
- Wet all lever joints and bearing points, which are not subjected to lubrication, slightly with oil.
- Drain air reservoir.
- Lower the height adjustment (optional).

NOTE

Make a note of all service and maintenance work that has to be done before the start of the next season and place a corresponding order with your HORSCH sales partner in due time. Your HORSCH dealer will be in a much better position to execute the maintenance service and possibly necessary repairs outside the season.

Drainage / Water system residue drain Basic and CCS

Spraying mixture container

1. Switch off all functions.
2. Open the suction filter.
3. Remove the cap on the residue drain / filling port.
4. Put a suitable collecting vessel under the drain.
5. Set the suction and pressure valve so that the spraying mixture container is drained without residue.
6. Empty the pressure filter via the valve.
7. Turn the open valves to the desired position.
8. Close the port again with the cap!
9. Properly dispose of the collected residual spraying mixture!

Fresh water tank

1. Remove the cap on the connection for fresh water filling and open the ball valve.
2. Allow the fresh water to drain.
3. Close the ball valve again and close the port again with the cap.
4. Drain the hoses on the sensor of the fresh water tank. Loosen the wide clamp on one side for this purpose.

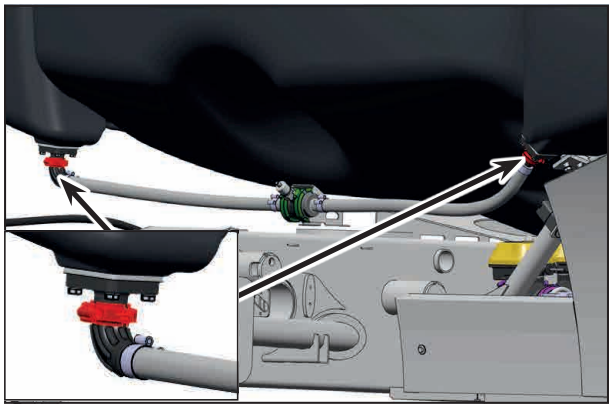

5. Reattach the hoses on the sensor of the fresh water tank. Fasten the wide clamp again.
6. Properly dispose of the collected residual spraying mixture!

Drainage / residue drain water systems Basic Pro and CCS Pro

Spraying mixture container

1. Switch off all functions.
2. Open the suction filter.
3. Remove the cap on the residue drain / filling port.
4. Put a suitable collecting vessel under the drain.
5. Activate the *residue drain* function on page 3 of the external control terminal to completely drain the spraying mixture container.
6. Empty the pressure filter via the valve.
7. Deactivate the *residue drain* function on the external control terminal again.
8. Close the port again with the cap!
9. Properly dispose of the collected residual spraying mixture!

Fresh water tank

1. Remove the cap on the connection for fresh water filling and open the ball valve.
2. Allow the fresh water to drain.
3. Close the ball valve again and close the port again with the cap.
4. Drain the hoses on the sensor of the fresh water tank. Loosen the wide clamp on one side for this purpose.

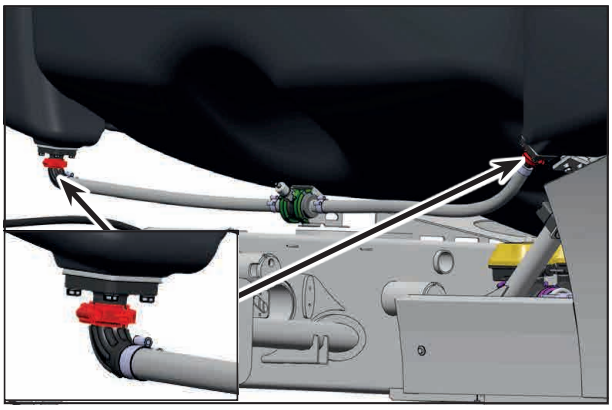

5. Reattach the hoses on the sensor of the fresh water tank. Fasten the wide clamp again.
6. Properly dispose of the collected residual spraying mixture!

Putting the sprayer system into winter storage

Clean machine with fresh water

- See chapter *Cleaning*.

Empty the machine completely

- Drain and clean suction filter.
- Drain and clean pressure filter.
- Activate the air function (optional).
- Operate the high pressure cleaner until no more water runs out (optional).
- Operate the NightLight until no more water runs out (optional).

- Empty the hand washing tank. Open the drain plug on the bottom of the tank for this purpose and then close it again.

Hand washing tank

- Open the cap and filling valve of the fresh water tank to drain it completely.
- Drain the hoses on the sensor of the fresh water tank.
- Open the cap and filling valve of the suction connection to fill the spraying mixture container.
- Open the cap and filling valve of the pressure output to drain the connection.

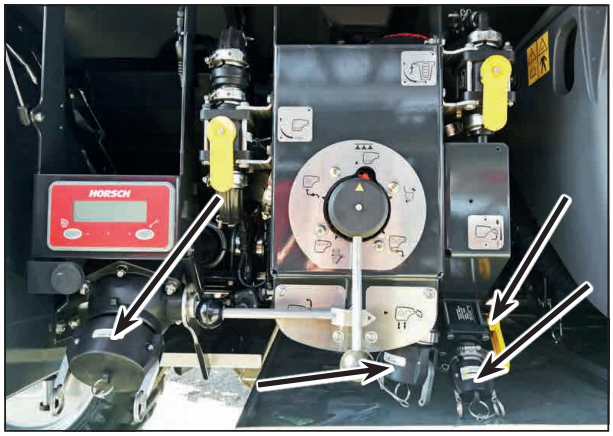

Filling ports of water system Basic and water system CCS

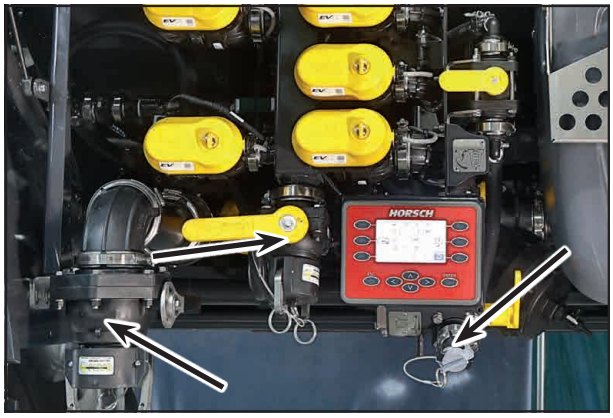

Filling ports of water systems Basic Pro and CCS Pro

Machines with filling pump optional

- Open the cap and filling valve of direct filling to drain it completely (optional).
- Drain the pump and check the cooling chamber for sufficient antifreeze protection, replenish if necessary.

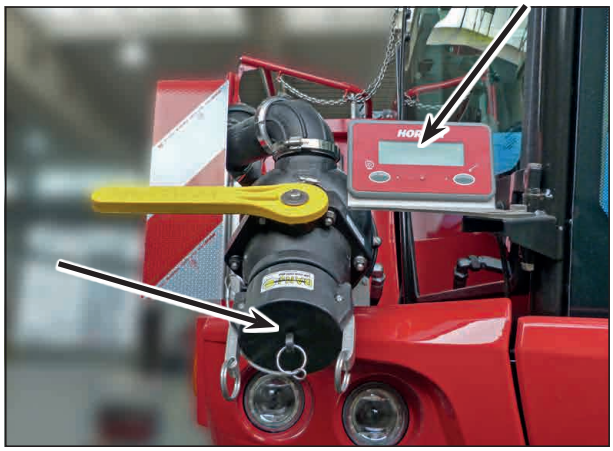

Direct filling connection at the right of the cab (optional)

NOTE

Refer to the supplied HORSCH terminal operating instructions (Chapter Winter storage of spraying system) for further information on putting the spraying system in winter storage.

Winter storage

1. Depending on the desired frost protection, fill the appropriate amount of gallons (litres) of antifreeze and clear water into the fresh water tank. At least 60 litres of the finished mix are required.

⚠ NOTE

After draining the machine (without air function) approx. 20 - 40 litres of water still remains in the lines! This residual quantity mixes with the antifreeze mix during the winter storage process and thereby lowers the antifreeze temperature even further!

Frost-proof to	Antifreeze agent	Clear water
-20°C	30 L	20 L
-27°C	35 L	15 L
-40°C	45 L	10 L
This table only serves as a note!		

⚠ NOTE

Follow the specifications of the antifreeze agent used to mix the desired concentration!
Use only approved anti-freeze agents!

2. Activate outside cleaning on the external control terminal (optional equipment). Apply pressure to the spray gun until antifreeze mix escapes. Now deactivate outside cleaning again.
3. Activate the high pressure cleaner on the external control terminal (optional equipment). Apply pressure to the washing gun until antifreeze mix escapes. Now deactivate the high pressure cleaner again.
4. Activate NightLight cleaning (optional equipment) on the external control terminal until an antifreeze mix escapes at the cleaning nozzles. The function can only be activated for 4 seconds at a time. The function can only be activated again following a pause of 3 seconds.
5. Start the Winter Storage function on the external control terminal. The message *HP Cleaner and NightLight Cleaning actuated*? is displayed. Confirm the message with “ENTER”. (Only for machines of the Basic Pro and CCS Pro variants. On machines of the variants Basic and CCS the function is performed on the main terminal)

⚠ NOTE

Refer to the supplied HORSCH terminal operating instructions (Chapter Winter storage of spraying system) for further information on putting the spraying system in winter storage.

Before the new season

Before the start of the new season the machine should be thoroughly examined. A machine in technically mint condition rules out costly malfunctions during the season.
Clean the machine thoroughly from inside and outside.

➢ Drain the antifreeze agent into a suitable collection vessel via the residue drain.

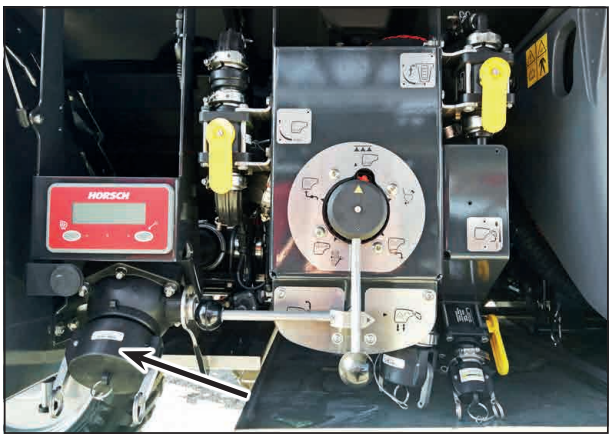

Residue drain of water system Basic and water system CCS

Residue drain of water systems Basic Pro and CCS Pro

- Store or dispose of anti-freeze as specified by the manufacturer.
- Drain the fluid in the pressure fitting via the pressure output also into a suitable collection vessel.

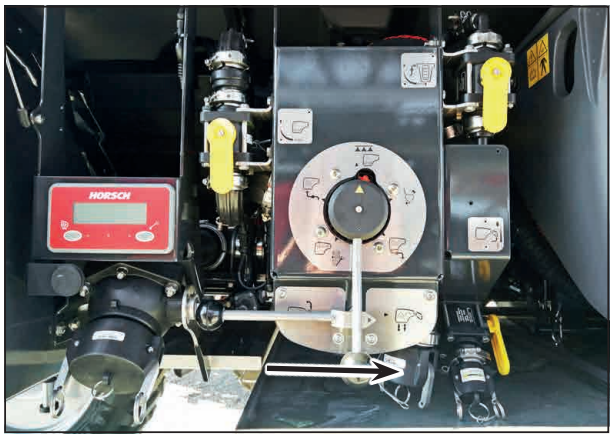

Pressure output of water systems Basic and CCS

Pressure output of water systems Basic Pro and CCS Pro

- Clean the spraying system thoroughly with fresh water. This is the only way of ensuring that no more antifreeze mix is present in the crop protection sprayer.

  Let the existing cleaning programs run several times with fresh water.
- Completely lubricate the machine as per lubrication chart.
- Check whether all bolts have been tightened and that all cotter pins are in place.
- Check the tyre pressure!
- Position possibly removed belts and V-belts again and check the belt tension.
- Remove the covers from the engine openings.
- Check all seals and the filling capacity of the engine coolant.
- Check battery. Check the battery charge condition or voltage (recharge the battery, if necessary).

Liquid fertiliser operation

At present there are mainly two different types of liquid fertiliser available:

- Ammonium nitrate - carbonyl diamide solution (AHL) with 61 lbs (28 kg) N per 220 lbs (100 kg) AHL.
- An NP-solution 10-34-0 with 22 lbs (10 kg) N and 74 lbs (34 kg) P_2O_5 per 220 lbs (100 kg) NP-solution.

When using flat jet nozzles the corresponding values for the application quantity gal lqd/ac (l/ha) from the spraying table must be multiplied with 0.88 for ammonium nitrate - carbonyl diamide solution and 0.85 for NP-solution. The listed application quantities (l/ha) apply only for water.

The following is generally valid:

Place liquid fertiliser in the form of coarse drops to prevent burning of plants. Excessively large drops will roll off the leaf and small drops enhance the magnifying glass effect.
Due to the salt concentration in the fertiliser, excessive application of fertiliser can cause burning on the leaves.

3-jet nozzles (optional)

The use of 3-jet nozzles for the application of liquid fertiliser is beneficial if the liquid fertiliser is to enter into the plant through the roots rather than through the leaf.

The nozzle orifice integrated in the nozzle with its opening ensures an almost pressureless, coarse drop distribution of the liquid fertiliser. This prevents the generation of undesired spray mist and the formation of small droplets. The coarse drops created by the 3-jet nozzle hit the plants with low energy and roll off their surface.

Even though damage caused by burning is almost completely prevented, one should not use 3-jet spray nozzles for late top dressing, but use trailed hoses instead.

Only use the black bayonet nuts for all the following 3-jet nozzles.

Various 3-jet nozzles and their fields of application at approx. 5 mp/h (8 km/h)	
3 - jet - yellow	5.3 - 8.5 gal lqd/ac (50 - 80 l/ha) (AHL)
3 - jet - red	8.5 - 13.5 gal lqd/ac (80 - 126 l/ha) (AHL)
3 - jet - blue	12 - 19 gal lqd/ac (115 - 180 l/ha) (AHL)
3 - jet - white	17 - 28.5 gal lqd/ac (155 - 267 l/ha) (AHL)

NOTE

The pump must be flushed with fresh water after each liquid fertiliser operation. If not flushed with fresh water, the pump seals may become damaged!

Conversion table for spraying liquid fertiliser AHL

(Ammonium nitrate - carbonyl diamide solution)

NOTE

When filling pay attention to the different densities [lb/gal] ([kg/l]) of the individual fluids and the permissible payload of the crop protection sprayer!

N lbs (kg)	Sol. N gal (litre)	Sol. N lbs (kg)
22 (10)	7 (27.8)	78 (35.8)
26 (12)	8 (33.3)	94 (42.9)
30 (14)	10 (38.9)	110 (50.0)
35 (16)	11 (44.5)	125 (57.1)
39 (18)	13 (50.0)	141 (64.3)
44 (20)	14 (55.5)	157 (71.5)
48 (22)	16 (61.6)	173 (78.5)
52 (24)	17 (66.7)	188 (85.6)
57 (26)	19 (75.0)	204 (92.9)
61 (28)	20 (77.8)	220 (100)
66 (30)	22 (83.4)	236 (107.1)
70 (32)	23 (89.0)	251 (114.2)
74 (34)	24 (94.5)	267 (121.4)
79 (36)	26 (100.0)	283 (128.7)
83 (38)	27 (105.6)	299 (135.9)
88 (40)	29 (111.0)	315 (143.0)
92 (42)	30 (116.8)	330 (150.0)
97 (44)	32 (122.2)	346 (157.1)
101 (46)	33 (127.9)	362 (164.3)
105 (48)	35 (133.3)	378 (171.5)
110 (50)	36 (139.0)	393 (178.6)
114 (52)	38 (144.6)	410 (186.0)
119 (54)	39 (150.0)	425 (193.0)
123 (56)	41 (155.7)	440 (200.0)
127 (58)	42 (161.1)	457 (207.3)
132 (60)	44 (166.7)	472 (214.2)
135 (62)	45 (172.3)	488 (221.7)
141 (64)	46 (177.9)	503 (228.3)
145 (66)	48 (183.4)	520 (235.9)
149 (68)	49 (188.9)	535 (243.0)
154 (70)	51 (194.5)	551 (250.0)
158 (72)	52 (200.0)	567 (257.2)
163 (74)	54 (204.9)	582 (264.2)
167 (76)	55 (211.6)	599 (271.8)

N lbs (kg)	Sol. N gal (litre)	Sol. N lbs (kg)
171 (78)	57 (216.5)	613 (278.3)
176 (80)	58 (222.1)	360 (285.8)
180 (82)	60 (227.9)	645 (292.8)
185 (84)	61 (233.3)	661 (300.0)
189 (86)	61 (233.3)	677 (307.5)
194 (88)	63 (242.2)	692 (314.1)
198 (90)	66 (250.0)	709 (321.7)
202 (92)	67 (255.7)	723 (328.3)
207 (94)	69 (261.2)	740 (335.8)
211 (96)	70 (266.7)	755 (342.7)
216 (98)	71 (272.0)	771 (350.0)
220 (100)	73 (278.0)	787 (357.4)
224 (102)	74 (283.7)	802 (364.2)
229 (104)	75 (285.5)	819 (371.8)
233 (106)	77 (294.2)	834 (378.3)
238 (108)	79 (300.0)	850 (386.0)
242 (110)	80 (305.6)	866 (393.0)
246 (112)	82 (311.1)	881 (400.0)
251 (114)	83 (316.5)	889 (407.5)
255 (116)	85 (322.1)	913 (414.3)
260 (118)	86 (328.0)	928 (421.0)
264 (120)	87 (333.0)	943 (428.0)
268 (122)	89 (339.0)	961 (436.0)
273 (124)	90 (344.0)	967 (443.0)
277 (126)	92 (350.0)	992 (450.0)
282 (128)	94 (356.0)	1.107 (457.0)
286 (130)	95 (361.0)	1.025 (465.0)
291 (132)	96 (367.0)	1.038 (471.0)
295 (134)	98 (372.0)	1.053 (478.0)
299 (136)	99 (378.0)	1.069 485.0

N lbs (kg)	Sol. N gal (litre)	Sol. N lbs (kg)
304 (138)	101 (384.0)	1.086 (493.0)
308 (140)	102 (389.0)	1.002 (500.0)
313 (142)	104 (394.0)	1.117 (507.0)
317 (144)	105 (400.0)	1.135 (515.0)
321 (146)	107 (406.0)	1.148 (521.0)
326 (148)	108 (411.0)	1.166 (529.0)
330 (150)	110 (417.0)	1.179 (535.0)
341 (155)	113 (431.0)	1.221 (554.0)
352 (160)	117 (445.0)	1.261 (572.0)
363 (165)	120 (458.0)	1.298 (589.0)
374 (170)	124 (472.0)	1.338 607.0
385 (175)	128 (486.0)	1.377 625.0
396 (180)	132 (500.0)	1.417 (643.0)
407 (185)	135 (514.0)	1.455 (660.0)
418 (190)	139 (527.0)	1.496 (679.0)
429 (195)	142 (541.0)	1.534 (696.0)
440 (200)	146 (556.0)	1.574 714.0

Density: 10.65 lb/gal (1.28 kg/l), i.e. approx. 61 lbs (28 kg) N to 220 lbs (100 kg) liquid fertiliser or 79 lbs (36 kg) N to 26 gal lqd (100 litre) liquid fertiliser at 41 - 50 °F (5 - 10 °C)

Appendix

Anzugsdrehmoment

HINWEIS

- The tightening torques only serve as guidelines and are generally valid. Actual data given at the corresponding points in the operating instructions have priority.
- Screws and nuts must not be treated with lubricants, since this would change the friction value.

Metric screws

Tightening torques - metric screws in ft lb (Nm)							
Size ø mm	Pitch mm	Screw design - property classes					Wheel nuts
		4.8	5.8	8.8	10.9	12.9	
3	0.50	0.7 (0.9)	0.8 (1.1)	1.3 (1.8)	1.9 (2.6)	2.2 (3.0)	
4	0.70	1.2 (1.6)	1.5 (2.0)	2.3 (3.1)	3.3 (4.5)	3.9 (5.3)	
5	0.80	2.4 (3.2)	3.0 (4.0)	4.5 (6.1)	6.6 (8.9)	7.7 (10.4)	
6	1.00	4.1 (5.5)	5.0 (6.8)	7.7 (10.4)	11.3 (15.3)	13.2 (17.9)	
7	1.00	6.9 (9.3)	8.5 (11.5)	12.7 (17.2)	18 (25)	22 (30)	
8	1.25	10.0 (13.6)	12.4 (16.8)	18 (25)	27 (37)	33 (44)	
8	1.00	10.7 (14.5)	13 (18)	20 (27)	30 (40)	35 (47)	
10	1.50	19.6 (26.6)	24 (33)	37 (50)	54 (73)	63 (86)	
10	1.25	21 (28)	26 (35)	39 (53)	58 (78)	67 (91)	
12	1.75	34 (46)	41 (56)	64 (86)	94 (127)	110 (148)	
12	1.25	37 (50)	46 (62)	70 (95)	103 (139)	120 (163)	
14	2.00	54 (73)	66 (90)	101 (137)	148 (201)	173 (235)	
14	1.50	58 (79)	71 (96)	111 (150)	162 (220)	190 (257)	
16	2.00	83 (113)	104 (141)	158 (214)	232 (314)	272 (369)	
16	1.50	89 (121)	111 (150)	169 (229)	248 (336)	290 (393)	
18	2.50	116 (157)	143 (194)	226 (306)	321 (435)	375 (509)	
18	1.50	131 (178)	162 (220)	254 (345)	362 (615)	424 (575)	221 (300)
20	2.50	164 (222)	203 (275)	319 (432)	454 (615)	530 (719)	
20	1.50	183 (248)	226 (307)	356 (482)	507 (687)	593 (804)	
22	2.50	225 (305)	277 (376)	370 (502)	622 (843)	728 (987)	
22	1.50	249 (337)	307 (416)	482 (654)	688 (932)	804 (1,090)	376 (510)
24	3.00	282 (383)	350 (519)	549 (744)	800 (1080)	915 (1,240)	
24	2.00	310 (420)	383 (519)	600 (814)	860 (1160)	1,000 (1,360)	
27	3.00	419 (568)	519 (703)	740 (1000)	1,160 (1570)	1,360 (1,840)	
27	2.00	454 (615)	560 (760)	885 (1200)	1,300 (1700)	1,470 (1,990)	
30	3.50	569 (772)	730 (995)	1,100 (1500)	1,570 (2130)	1,840 (2,500)	
30	2.00	630 (850)	780 (1060)	1,230 (1670)	1,750 (2370)	1,760 (2,380)	

Inch screws

Tightening torques - inch screws in ft lb (Nm)							
Screw diameter		Strength 2		Strength 5		Strength 8	
		No marks on head		3 marks on head		6 marks on head	
Inch	mm	Coarse thread	Fine thread	Coarse thread	Fine thread	Coarse thread	Fine thread
1/4	6.4	4.1 (5.6)	4.7 (6.3)	6.4 (8.6)	7.2 (9.8)	9.0 (12.2)	10.0 (13.5)
5/16	7.9	8.0 (10.8)	9.0 (12.2)	13.0 (17.6)	14.0 (19.0)	18.0 (24.4)	20.0 (27.1)
3/8	9.5	15.0 (20.3)	17.0 (23.0)	23.0 (31.2)	26.0 (35.2)	33.0 (44.7)	37.0 (50.2)
7/16	11.1	25.0 (33.9)	27.0 (36.6)	37.0 (50.2)	41.0 (55.6)	52.0 (70.5)	58.0 (78.6)
1/2	12.7	35.0 (47.5)	40.0 (54.2)	57.0 (77.3)	64.0 (86.8)	80.0 (108.5)	90.0 (122.0)
9/16	14.3	50.0 (67.8)	60.0 (81.3)	80.0 (108.5)	90.0 (122.0)	115.0 (156.0)	130.0 (176.3)
5/8	15.9	70.1 (95.0)	80.0 (108.5)	110.0 (149.1)	125.0 (169.5)	159.0 (216.0)	180.0 (244.0)
3/4	19.1	125.0 (169.5)	140.0 (189.8)	200.0 (271.1)	220.0 (298.3)	280.0 (380,0)	315.0 (427.0)
7/8	22.2	130.0 (176.3)	145.0 (196.6)	320.0 (433.9)	350.0 (474.5)	450.0 (610.0)	500.0 (678.0)
1	25.4	190.0 (257.6)	205.0 (278.0)	480.0 (650.8)	530.0 (718.6)	675.0 (915.2)	750.0 (1,017)
1 1/8	28.6	265.0 (359.3)	300.0 (406.8)	600.0 (813.5)	670.0 (908.4)	960.0 (1,302)	1,075 (1,458)
1 1/4	31.8	375.1 (508.5)	415.0 (562.7)	840.0 (1,139)	929 (1,261)	1,360 (1,844)	1,500 (2,034)
1 3/8	34.9	490.0 (664.4)	560.0 (759.3)	1,100 (1,491)	1,250 (1,695)	1,780 (2,414)	2,030 (2,753)
1 1/2	38.1	650.0 (881.3)	730.0 (989.8)	1,450 (1,966)	1,650 (2,237)	2,307 (3,128)	2,670 (3,620)

Stainless steel screws

Tightening torques - stainless steel screws in ft lb (Nm)				
Size ø mm	Pitch mm	Screw design		
		Property class 50	Property class 70	Property class 80
5	0.80	1.3 (1.7)	2.6 (3.5)	3.5 (4.7)
6	1.00	2.2 (3.0)	4.4 (6.0)	5.9 (8.0)
8	1.25	5.2 (7.1)	12 (16)	16 (22)
10	1.50	10 (14)	24 (32)	32 (43)
12	1.75	18 (24)	41 (56)	55 (75)
16	2.00	44 (59)	100 (135)	133 (180)
20	2.50	84 (114)	207 (280)	273 (370)
24	3.00	146 (198)	336 (455)	446 (605)
30	3.50	290 (393)	774 (1,050)	1,000 (1,400)

HORSCH Leeb metering cup

The Horsch Leeb metering cup is used to adjust and check agricultural spraying implements. Before starting the measurement, the field sprayer to be calibrated must be filled with clean water. Now open the nozzles with the desired settings for placing the crop protection agents. All nozzles should always be opened during setting or checking.

Determining the placing quantity in l/ha

To determine the placing quantity, the HORSCH Leeb metering cup is held under a spraying nozzle of the field sprayer for 30 seconds at 20 in. (50 cm) nozzle spacing and for 60 seconds at 10 in. (25 cm) nozzle spacing. The pump must be switched on for the entire period and the placing quantity set on the terminal must not be changed. Now place the metering cup on a level surface. The fluid level indicates the measured placing quantity at different travel speeds.

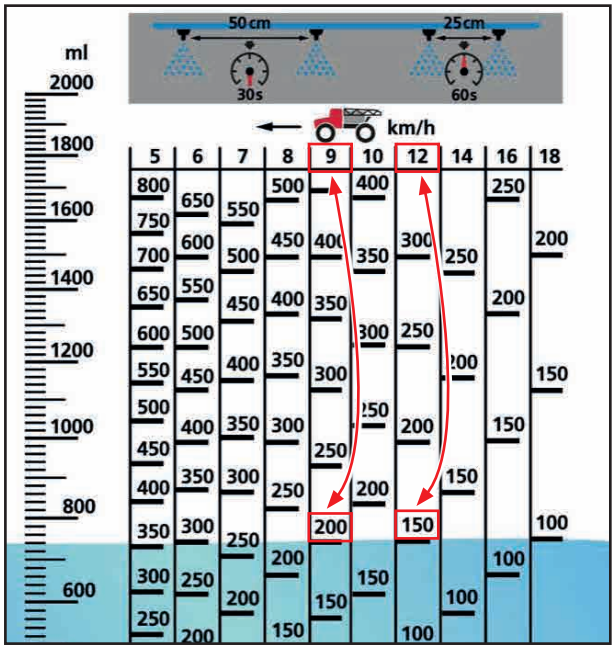

The example shows: 16 gal lqd/ac (150 l/ha) at 7.5 mph (12 km/h) or 21 gal lqd/ac (200 l/ha) at 5.6 mph (9 km/h) etc.

- Placing quantity too high, lower spraying pressure.
- Placing quantity too low, increase spraying pressure.

Nozzle selection and control

The fluid level, which indicates the placing quantity in l/ha on one side of the HORSCH Leeb metering cup, shows at the same time on the other side of the measuring cup with which nozzle size and at which spraying pressure this placing quantity is reached.

- At a nozzle spacing of 20 in. (50 cm) the respective nozzle sizes can be read off directly.
- At a nozzle spacing of 10 in. (25 cm) the respective nozzle sizes must be halved.

Only for crop protection agents

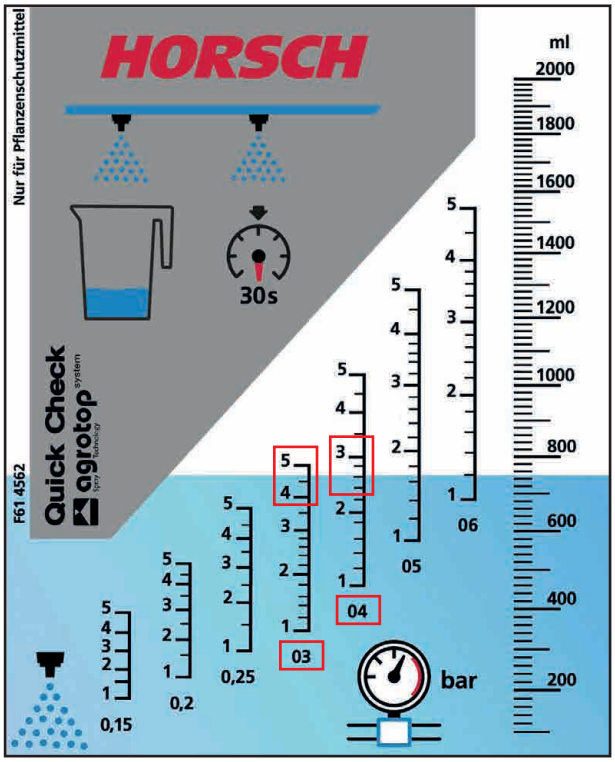

Example: The previous fluid level indicates that at 20 in. (50 cm) nozzle spacing the desired placing quantity of 16 gal lqd/ac (150 l/ha) is achieved at approx. 7 mph (12 km/h) with nozzle size 04 (red) at approx. 40 psi (2.7 bar) or with nozzle size 03 (blue) at approx. 70 psi (4.8 bar) etc. Accordingly, with a nozzle spacing of 10 in. (25 cm), the placing quantity of 16 gal lqd/ac (150 l/ha) at 7 mph (12 km/h) is achieved with nozzle size 02 (yellow) at approx. 40 psi (2.7 bar) or with nozzle size 015 (green) at approx. 70 psi (4.8 bar).

All values apply to water with a temperature of 59°F° (15 °C) and the pressure measured at the nozzle. As a rule, the spraying pressure displayed at the terminal is slightly higher, as pressure losses occur between the fittings and nozzles.

Index

D

E

F

T

U

V

W

All details on technical specifications and pictograms are approximate and for information only. Subject to technical product revisions.

HORSCH LEEB Application Systems GmbH
Kleegartenstraße 54
94405 Landau a. d. Isar

Tel.: +49 9951 6041-0
Fax: +49 9951 6041-3092
E-Mail: info.leeb@horsch.com

HORSCH

Farming with passion

www.horsch.com